GIOVENZANA INTERNATIONAL B.V.
1077 XX Amsterdam, The Netherlands
WTC Strawinskylaan 1105
Phone: +31(0) 20.4413576 - Fax: +31(0) 20.4413456
E-mail: *giovenzana@giovenzana.com*

G.T.R. LLC
127051, Moscow, Russian Federation
Likhov lane, h.3, b.2, ufficio 101
Phone: +7.495.6991296 / +7.499.9228548
E-mail: *gtr@giovenzana.com*

GIOVENZANA CONTROLS INDIA Pvt. Ltd.
400064, Mumbai - Near Mindspace, Malad West
A-203, Knox Plaza, Chincholi, Off Link Road
Phone: +91.22.42640071
E-mail: *ggindia@giovenzana.com*

GIOVENZANA do Brasil
São Paulo - Brasil
Rua Enxovia, 472 cj1904
Cep. 04711-030; Vila São Francisco
Phone: +55 11 3360-6840 / 11 3530-5316
E-mail: *logistic.brasil@giovenzana.com*

Branch
DUBAI U.A.E. P.O. Box 262146 - J.A.F.Z.A. 15, Jebel Ali Free Zone
Phone: +971.4.8870788 - Fax: +971.4.8870787
E-mail: *uae@giovenzana.com*

www.giovenzana.com

AUTOMATION • REGOLUS SWITCH DISCONNECTORS

GIOVENZANA INTERNATIONAL B.V.

GIOVENZANA
INTERNATIONAL B.V.

REGOLUS SWITCH DISCONNECTORS
SQ • SQN • SE Series

GIOVENZANA
INTERNATIONAL B.V.

Automation - Lift - Handling System

QUALITY AS A LIFE STYLE

www.giovenzana.com

SWITCH DISCONNECTORS REGOLUS: SQ • SQN • SE Series - Rev. 02_2017
GIOVENZANA INTERNATIONAL B.V. reserves the right to modify, as specifications change,all technical and functional characteristics of the products shown in the catalogue without prior notice as this information is intended for general knowledge and is not legally binding.
The most up-to-date version of the catalogue can be downloaded from the download section of the site www.giovenzana.com.

GENERAL INDEX

REGOLUS SWITCH DISCONNECTORS

2 AUTOMATION TECHNOLOGIES

SQ SERIES

5 REGOLUS SQ SERIES
6 TECHNICAL CHARACTERISTICS SQ
8 SQ025 - SQ032 BODIES
14 SQ025 - SQ032 ACCESSORIES
16 SQ040 - SQ063 BODIES
22 SQ040 - SQ063 ACCESSORIES
24 SQ ACTUATORS
32 COMPLETE DEVICES IN ENCLOSURES
40 SQ ENCLOSURES
42 MOUNTING INSTRUCTIONS SQ SERIES

SQN SERIES

45 REGOLUS SQN SERIES
46 TECHNICAL CHARACTERISTICS SQN
48 SQN BODIES
50 SQN ACCESSORIES
51 SQN ACTUATORS
52 COMPLETE DEVICES IN ENCLOSURES
54 MOUNTING INSTRUCTIONS SQN SERIES

SE SERIES

57 REGOLUS SE SERIES
58 TECHNICAL CHARACTERISTICS SE
60 SE BODIES
66 SE ACCESSORIES
67 SE ENCLOSURES
68 SE ACTUATORS
74 COMPLETE DEVICES IN ENCLOSURES
82 MOUNTING INSTRUCTIONS SE SERIES

84 NOTES

AUTOMATION TECHNOLOGIES

AUTOMATION

The solutions offered by **Giovenzana** are the results of the detailed analysis of industrial electrical accessories requirements in conformity with all relevant international standards. The range includes:

- Cam switches Phoenix series from 12A to 200A;
- Switch disconnectors Regolus series from 32A to 160A;
- Auxiliary Controls Pegasus, Orion and NEMA series;
- Limit switches available in pre-wired and thermoplastic version;
- Foot switches and micro switches.

QUALITY

Giovenzana, leader in the elevator and lifting equipment field, has gained a prominent position in the automation sector with the launch of industrial control devices into the market. For many years, all commercial and industrial operations have been integrated within the **UNI EN ISO 9001:2008** quality system.

CSQ certificate N 9105. GIOV.

Quality system is the end users guarantee that all production stages are closely followed under strict control and adhere to the requirements set by the company both in terms of customer expectations and compliance to the relevant international standards as proved by the various certificates **Giovenzana** holds for its products.

By the **UNI EN ISO 14001:2004**, **Giovenzana** keeps up with new technologies in order to reduce raw materials consumption, energy and natural resources and to minimize waste and emissions. This reduces the environmental impact.

The certification CSQ N 9191. GIBV.

COMPLIANCE

All **Giovenzana** products are manufactured according to the most relevant Cee directives. **Giovenzana** certifies this compliance with a declaration of conformity.

CERTIFICATIONS

In order to reach its high quality level **Giovenzana**'s products are tested by multiple third parties. In order to obtain the UL mark, **Giovenzana** submits their products to Underwriter Laboratories Inc., one of the most eminent independent certification companies in the World.

CEE DIRECTIVES

From January 1st, 1997 it is compulsory to CE mark all electromechanical products: this has been outlined by an important regulation: 2006/95/CE Low Voltage Directives.

CE MARK

European directives, applied to all national regulations, set the minimum requirements in term of safety of all electrical material sold within the EU.

Compliance to these requirements is certified by the manufacturer by the CE mark placed on the products.

STANDARDS

Giovenzana's products comply with both the European EN and the American UL standards.

These regulations, such as CEI EN 60204-1 (CEI 44-5) with regards to the safety requirements of the electrical circuits on board industrial machinery, define the characteristics, performance and use of the products.

EN EUROPEAN STANDARDS

The EN European standards are originated from IEC International standards and are the result of the collaboration between CENELEC (European Committee for Electrotechnical Standardization) member countries.

These standards cover and eliminate existing national standards that may be contradictory and non-compliant.

GIOVENZANA
INTERNATIONAL B.V.

REGOLUS SWITCH DISCONNECTORS
SQ Series

EXECUTION OVERVIEW AND GENERAL CHARACTERISTICS

REGOLUS SWITCH DISCONNECTORS

The disconnectors Regolus Series, built to the most stringent European and international standards (**IEC / EN 60947-3, UL508**), meet all the safety requirements.

The long industrial experience combined with the use of the best materials, plant and most modern design tools, enables us to produce a range of high quality equipment placing Giovenzana brand as synonymous of reliability, operational reliability and durability of its products.

SQ SERIES

The disconnectors modular SQ Series from 32A to 80A, 2-3 poles have the possibility to install additional poles, auxiliary contacts and terminal IP20 protections.

CHARACTERISTICS

- Rated current from 32A to 80A
- Series modular with 3 extensible poles
- Additional pole (4th pole) and

AVAILABLE VERSIONS

- Switch disconnectors 6 poles and changeover 3 poles
- Panel mounting Screw Fixing
- Panel mounting Ø22,5mm Central Hole Fixing (SQ025 - SQ032 only)
- Base Mounting
- Door locking
- Direct command

COMPLY WITH RULES

- IEC/EN 60947-3, UL508
- IEC/EN 60947-5-1, UL508 (auxiliary contacts)

SERIES			SQ025 - SQ032	SQ040 - SQ063	AUXILIARY CONTACTS
Protection class	control	EN 60529 (UL50 ◆) NEMA 4X	IP65 (Type 1 - 4 -4X)	IP65 (Type 1 - 4 -4X)	-
	terminals	EN 60529	IP20	IP20	IP20
Material Group		EN 60947-1	II	II	II
Pollution Grade		EN 60947-1	3	3	3
Flammability		UL94	VO (Live Electric parts)	VO (Live Electric parts)	VO (Live Electric parts)
Ambient Temperature		°C	Operating: -25 +55	Operating: -25 +55	Operating: -25 +55
		°C	Storage: -30 +70	Storage: -30 +70	Storage: -30 +70
Climate Withstand		IEC 68 part 2-3	Constant Hot Damp	Constant Hot Damp	Constant Hot Damp
		IEC 68 part 2-30	Cyclical Hot Damp	Cyclical Hot Damp	Cyclical Hot Damp
Connections	Terminal Block Caliber	EN60947-1	A6	A8	A2
	Terminal Screw		M4	M5	M3,5
	Screwing Torque	EN60947-1	1,2 Nm	3 Nm	0,8 Nm
		UL508	7 lb. in. (0,8 Nm)	32,0 lb. in. (3,6 Nm)	12 lb. in.
Connectable Section	Flexible Conductors n°1 min/max	mm²	1,5 - 10	6 - 25	1 - 2,5
		AWG	12 - 8	10 - 2	18 - 12
	Solid Conductors n°1 min/max	mm²	1,5 - 10	10 - 35	1 - 2,5
		AWG	12 - 8	10 - 2	18 - 12
Contacts			Slow Opening Double-Break	Slow Opening Double-Break	Slow opening Double-Break Positive opening for NC ➔
Opening Angles			90°	90°	-
Mechanical Lifetime at 120 operations per hour		nr. of cycles	100.000	100.000	1.500.000
Maximum Altitude	Until 2000 mt	Derating	Standard	Standard	-
	Over 2000 mt	Voltage Derating (V)	< 1% ogni 100 m	< 1% ogni 100 m	-
		Power Derating (A)	< 1% ogni 1000 m	< 1% ogni 1000 m	-

CERTIFICATIONS	SQ025	SQ032	SQ040	SQ063	AUXILIARY CONTACTS
CE mark - Europe	■	■	■	■	■
cUL Listed - USA and Canada	●	●	●	●	●
Istituto Marchio Qualità (IMQ) - Italy	●	●	●	●	●
CCC China					●
EAC Russia					●

TECHNICAL CHARACTERISTICS

EN 60947-3 CHARACTERISTICS		SQ025	SQ032	SQ040	SQ063	AUXILIARY CONTACTS
Rated operating voltage Ue	V	690	690	690	690	690
Rated insulation voltage Ui	V	690	690	690	690	690
Rated impulse withstand voltage Uimp (sectionable)	kV	8	8	8	8	4
Rated thermal current Ith	A	32	40	63	80	16
Rated thermal current in enclosed Ithe	A	32	40	63	80	10
Frequency	Hz	50/60	50/60	50/60	50/60	50/60

RATED OPERATING CURRENT Ie: alternate current			SQ025	SQ032	SQ040	SQ063	AUXILIARY CONTACTS
AC-21A Switching resistive loads with light overloads	690V	A	32	40	63	80	AC-15 240V - 5A
AC-22A Switching mixed resistive and inductive loads at light overloads	500V	A	-	-	-	-	DC-13
	690V	A	25	32	63	80/-	250V - 0,44A
AC-23A Periodic switching of motors 3 phases - 3 poles	230V	A/kW	25/7,5	32/10	63/-	80/-	-
	400V	A/kW	25/15	32/18,5	50/-	75/-	-
	500V	A/kW	25/15	32/22	50/-	75/-	-
	690V	A/kW	16/15	20/18,5	26/-	32/-	-
AC3 Starting of cage motors (interruption hile running) 3 phases - 3 poles	230V	A/kW	22/5,5	27/7,5	45/-	60/-	-
	400V	A/kW	22/11	27/15	40/-	60/-	-
	500V	A/kW	22/11	27/18,5	35/-	45/-	-
	690V	A/kW	16/11	20/15	22/-	25/-	-
Nominal interruption power **AC-23A** (cosfi 0,45)	230V	A	200	256	360	600	-
	400V	A	200	256	360	536	-
	500V	A	200	256	280	536	-
	690V	A	128	160	176	256	-

SHORT CIRCUIT CHARACTERISTICS			SQ025	SQ032	SQ040	SQ063	AUXILIARY CONTACTS
Corrente nominale di breve durata Icw (1 s)		A	800	800	1200	1500	-
Potere nominale di chiusura sotto cortocircuito Icm		A	1500	1500	2200	2800	-
Corrente condizionale di cortocircuito		kA	10	10	10 | 5	10 | 5	1
Fusibili classe gG	500V	A	-	-	-	-	10
	690V	A	40	40	63 | 80	63 | 80	-

UL 508 CHARACTERISTICS			SQ025	SQ032	SQ040	SQ063	AUXILIARY CONTACTS
General Use	600V AC	A	32	40	60	80	HD A600 AC Q600 DC
Standard motor load single phase - 2 poles	120V AC	HP (FLA)	1,5 (20)	2 (24)	2 (24)	3 (34)	-
	200-208V AC	HP	2	3	3	5	-
	240V AC	HP (FLA)	3 (17)	5 (28)	5 (28)	7,5 (40)	-
Standard motor load 3 phases - 3 poles	200-208V AC	HP	7,5	10	7,5	10	-
	240V AC	HP (FLA)	7,5 (22)	10 (28)	10 (28)	15 (42)	-
	480V AC	HP (FLA)	10 (14)	15 (21)	25 (34)	30 (40)	-
	600V AC	HP (FLA)	15 (17)	20 (22)	30 (32)	40 (41)	-

◆ See ACTUATORS from page 24 to page 31. ■ Comply to the requirements by passed test. ● Approved.

PANEL MOUNTING

Dimensions and details of fixing holes

TYPE R

- Screw Fixing.
- See page 24 for combinable actuators.

SERIES	AC-21A	AC-23A	CODE	
	AMP. 690V	AMP. 400V	2 POLES	3 POLES
SQ025	32	25	SQ025002R	SQ025003R
SQ032	40	32	SQ032002R	SQ032003R

2 POLES

3 POLES

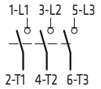

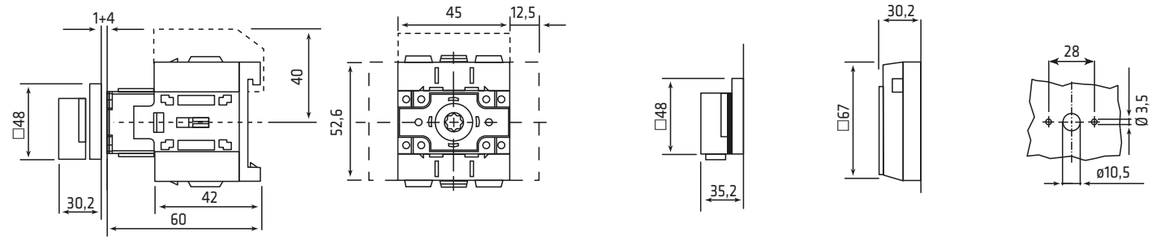

Actuator Type 001 002 003 004 009 010

TYPE X

- ø22,5 Central hole fixing panel.
- See page 26 for combinable actuators.

SERIES	AC-21A	AC-23A	CODE	
	AMP. 690V	AMP. 400V	2 POLES	3 POLES
SQ025	32	25	SQ025002X	SQ025003X
SQ032	40	32	SQ032002X	SQ032003X

2 POLES

3 POLES

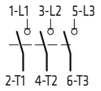

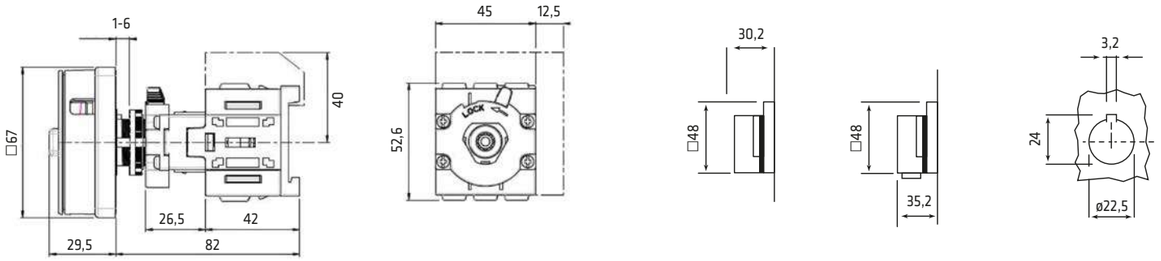

Actuator Type 089X 090X 079X 080X 087X 088X

New support D.22

for Regolus switch disconnectors

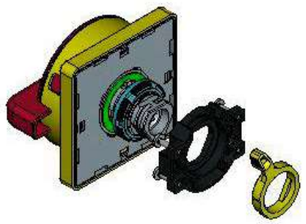

3 Blocking points

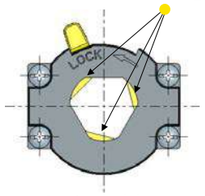

Lock position

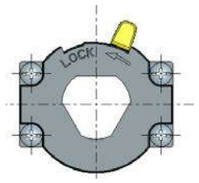

Unlock position

BASE MOUNTING

TYPE B

- Fixing box DIN RAIL DIN-EN 50022-35.
- Suitable for Door Locking actuators.
- See page 25 and 29 for combinable actuators.

SERIES	AC-21A	AC-23A	CODE	
	AMP. 690V	AMP. 400V	2 POLES	3 POLES
SQ025	32	25	SQ025002B	SQ025003B
SQ032	40	32	SQ032002B	SQ032003B

2 POLES

3 POLES

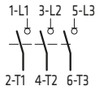

Dimensions and details of fixing holes

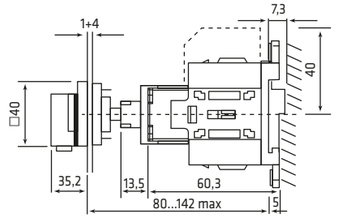

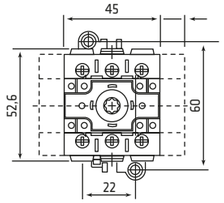

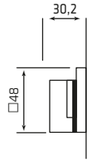

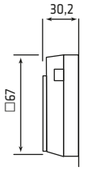

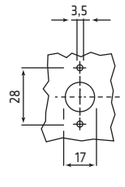

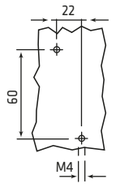

Actuator Type 005 006 | 020 030 | 011 012 | Panel | Box

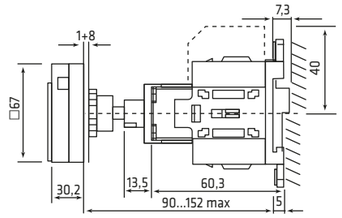

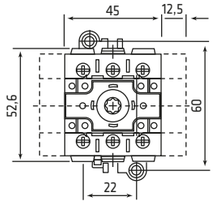

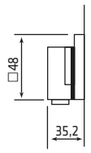

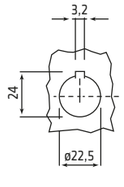

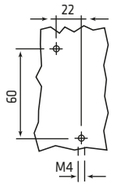

Actuator Type 063 064 | 069 077 | Panel | Box

TYPE K

- Fixing box DIN RAIL DIN-EN 50022-35.
- Door locking with shaft fixed on the actuators.
- See page 25 for combinable actuators.

SERIES	AC-21A	AC-23A	CODE	
	AMP. 690V	AMP. 400V	2 POLES	3 POLES
SQ025	32	25	SQ025002K	SQ025003K
SQ032	40	32	SQ032002K	SQ032003K

2 POLES

3 POLES

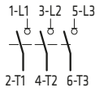

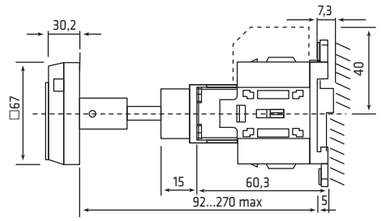

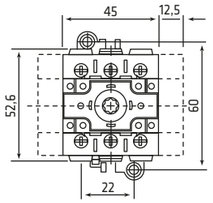

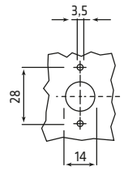

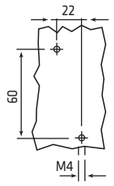

Actuator Type 091 092 | Panel | Box

BASE MOUNTING WITH DIRECT COMMAND

TYPE D - L1N

- Fixing box DIN RAIL DIN-EN 50022-35.
- Black knob locking in "0-OFF" position.

SERIES	AC-21A	AC-23A	CODE	
	AMP. 690V	AMP. 400V	2 POLES	3 POLES
SQ025	32	25	SQ025002DL1N	SQ025003DL1N
SQ032	40	32	SQ032002DL1N	SQ032003DL1N

2 POLES

3 POLES

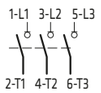

Dimensions and details of fixing holes

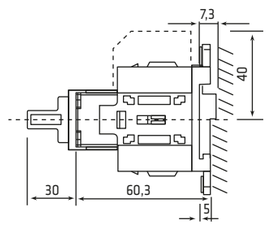

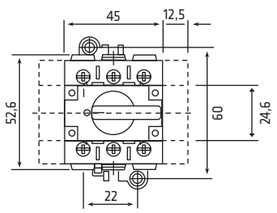

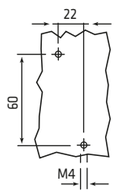

Box

PANEL MOUNTING

Dimensions and details of fixing holes

TYPE R

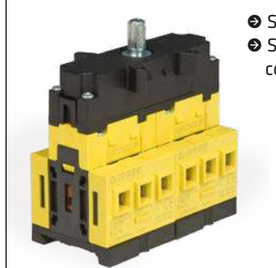

- Screw fixing.
- See page 24 for combinable actuators.

SERIES	AC-21A	AC-23A	CODE	
	AMP. 690V	AMP. 400V	6 POLES	CHANGEOVER 3 POLES
SQ025	32	25	SQ025006R	SQ025033R
SQ032	40	32	SQ032006R	SQ032033R

90°

6 POLES

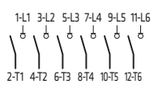

3 POLES

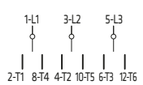

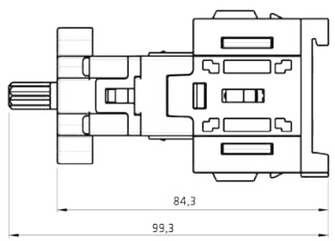

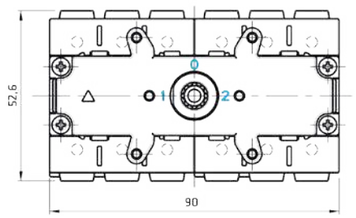

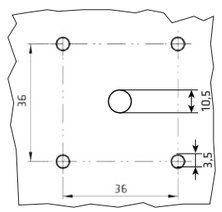

Panel

BASE MOUNTING

Dimensions and details of fixing holes

TYPE B

- Fixing box DIN RAIL DIN-EN 50022-35.
- Suitable for Door Locking actuators.
- See page 25 for combinable actuators.

SERIES	AC-21A	AC-23A	CODE	
	AMP. 690V	AMP. 400V	6 POLES	CHANGEOVER 3 POLES
SQ025	32	25	SQ025006B	SQ025033B
SQ032	40	32	SQ032006B	SQ032033B

90°

6 POLES

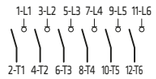

3 POLES

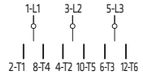

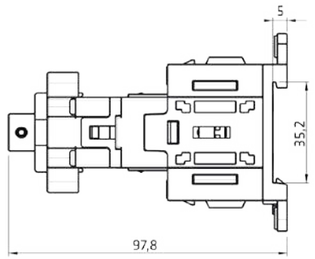

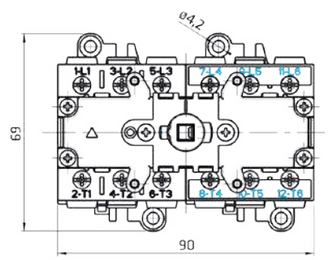

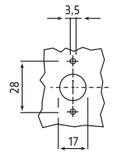

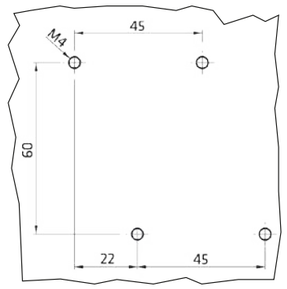

Panel

Box

ACCESSORIES | SQ025 - SQ032 Series
SQ SERIES

PANEL MOUNTING

ADDITIONAL POLES

SERIES	DESCRIPTION	CODE	DIAGRAM
SQ025 SQ032	Additional Pole NO	SQ025AFPR	7 — 8
		SQ032AFPR	
	4th Pole (early make contact)	SQ025ANIR	N — N
		SQ032ANIR	
	Neutral Terminal	SQ025ANPR	N — N
		SQ032ANPR	
	Ground Terminal	SQ025APER	PE — PE
		SQ032APER	

AUXILIARY CONTACTS

SERIES	DESCRIPTION	CODE	DIAGRAM
SQ025 SQ032	AUX 1NC	SQ010AS1R	1NC 1 — 2
	AUX 1NO	SQ010AS2R	1NO 3 — 4

TERMINAL PROTECTION

3 POLES	1 POLE
20900024	20900025

FIXING KEY

FIXING KEY DEVICE FOR FIXING HOLE Ø 22,5 mm
PCF

BASE MOUNTING

ADDITIONAL POLES

SERIES	DESCRIPTION	CODE	DIAGRAM
SQ025 SQ032	Additional Pole NO	SQ025AFPB	7 — 8
		SQ032AFPB	
	4th Pole (early make contact)	SQ025ANIB	N — N
		SQ032ANIB	
	Neutral Terminal	SQ025ANPB	N — N
		SQ032ANPB	
	Ground Terminal	SQ025APEB	PE — PE
		SQ032APEB	

AUXILIARY CONTACTS

SERIES	DESCRIPTION	CODE	DIAGRAM
SQ025 SQ032	AUX 1NC	SQ010AS1B	1NC 1 — 2
	AUX 1NO	SQ010AS2B	1NO 3 — 4

TERMINAL PROTECTION

3 POLES	1 POLE
20900023	20900025

FIXING KEY

FIXING KEY DEVICE FOR FIXING HOLE Ø 22,5 mm
PCF

SHAFT EXTENSIONS

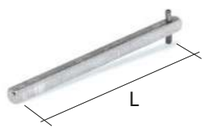

SHAFT EXTENSION □ 5 FOR DOOR INTERLOCK TYPE B	
L 185 mm	20401089
L 300 mm	20401164

PANEL MOUNTING

Dimensions and details of fixing holes

TYPE R

- Screw fixing.
- See page 26 for combinable actuators.

SERIES	AC-21A	AC-23A	CODE	
	AMP. 690V	AMP. 400V	2 POLES	3 POLES
SQ040	63	50	SQ040002R	SQ040003R
SQ063	80	75	SQ063002R	SQ063003R

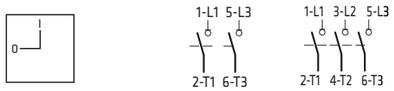

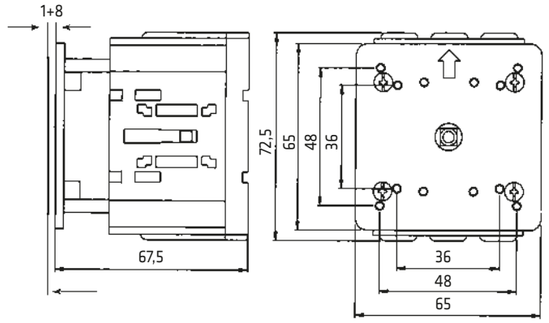

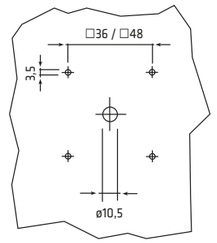

Panel

TYPE X

- ø22,5 mm Central hole fixing panel.
- See page 30 for combinable actuators.

SERIES	AC-21A	AC-23A	CODE	
	AMP. 690V	AMP. 400V	2 POLES	3 POLES
SQ040	63	50	SQ040002X	SQ040003X
SQ063	80	75	SQ063002X	SQ063003X

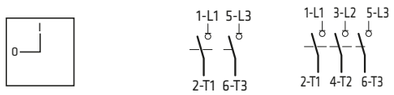

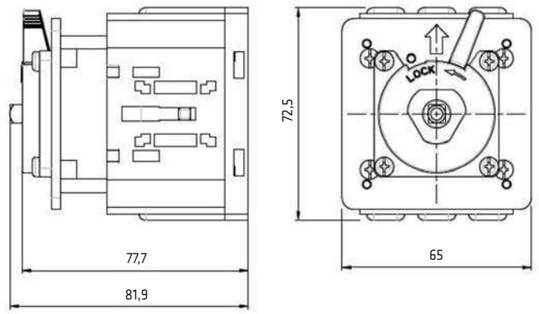

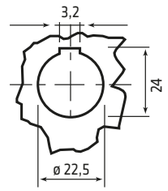

Panel

New Support D.22

for Regolus switch disconnectors

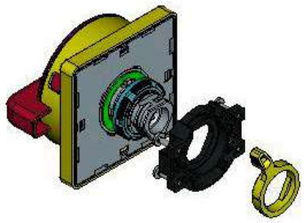

3 Blocking points

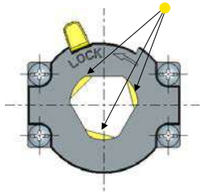

Lock Position

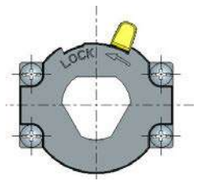

Unlock position

BASE MOUNTING

TYPE B

- Fixing box DIN RAIL DIN-EN 50022-35.
- Suitable for Door Locking actuators with shaft fixed on switch disconnectors body.
- See page 27 and 31 for combinable actuators.

SERIES	AC-21A	AC-23A	CODE	
	AMP. 690V	AMP. 400V	2 POLES	3 POLES
SQ040	63	50	SQ040002B	SQ040003B
SQ063	80	75	SQ063002B	SQ063003B

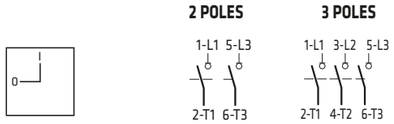

Dimensions and details of fixing holes

	STANDARD SHAFT	EXTENSION SHAFT □6 CODE 20900010
L min	112	112 (with cut shaft)
L max	142	242

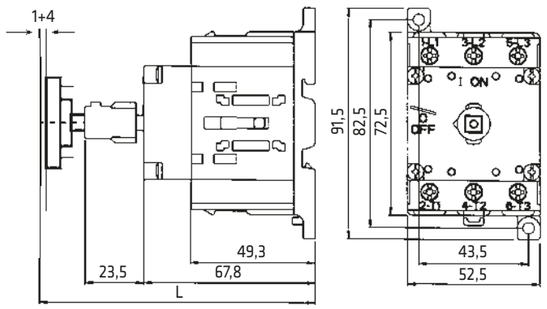

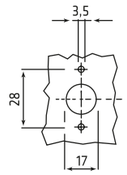

Panel

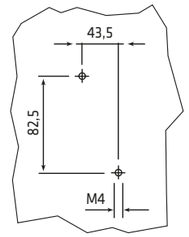

Box

BASE MOUNTING WITH DIRECT COMMAND

TYPE D - L2N

- Fixing box DIN RAIL DIN-EN 50022-35.
- Black knob locking in "0-OFF" position.

SERIES	AC-21A	AC-23A	CODE	
	AMP. 690V	AMP. 400V	2 POLES	3 POLES
SQ040	63	50	SQ040002DL2N	SQ040003DL2N
SQ063	80	75	SQ063002DL2N	SQ063003DL2N

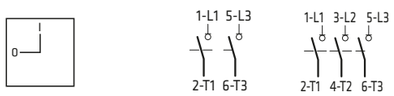

Dimensions and details of fixing holes

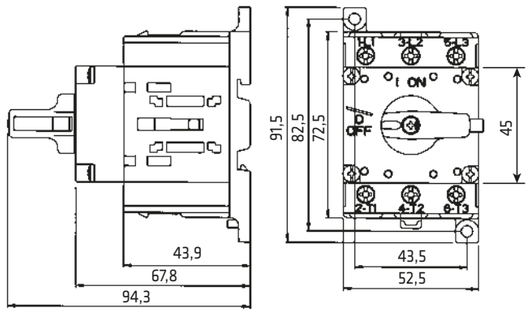

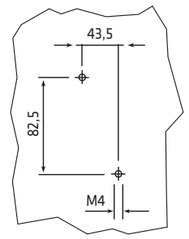

Box

PANEL MOUNTING

Dimensions and details of fixing holes

TYPE R

- Screw fixing.
- See page 26 for combinable actuators.

SERIES	AC-21A	AC-23A	PANEL MOUNTING	
	AMP. 690V	AMP. 400V	6 POLES	CHANGEOVER 3 POLES
SQ040	63	50	SQ040006R	SQ040033R
SQ063	80	75	SQ063006R	SQ063033R

90°

6 POLES

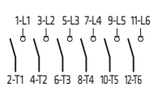

3 POLES

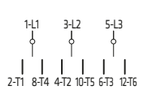

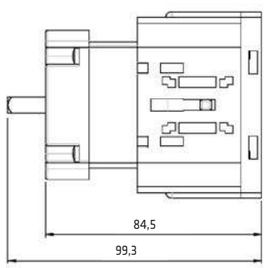

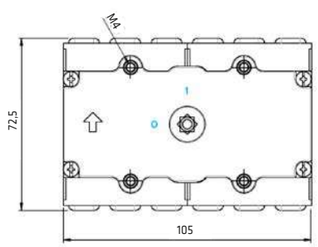

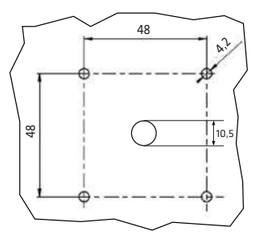

Panel

BASE MOUNTING

Dimensions and details of fixing holes

TYPE B

- Fixing box DIN RAIL DIN-EN 50022-35.
- Suitable for Door Locking actuators.
- See page 27 for combinable actuators.

SERIES	AC-21A	AC-23A	BASE MOUNTING	
	AMP. 690V	AMP. 400V	6 POLES	CHANGEOVER 3 POLES
SQ040	63	50	SQ040006B	SQ040033B
SQ063	80	75	SQ063006B	SQ063033B

90°

6 POLES

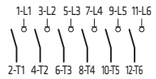

3 POLES

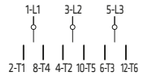

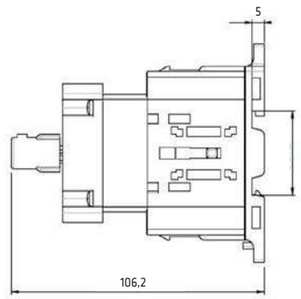

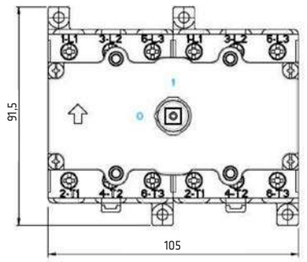

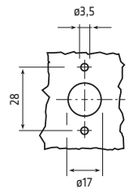

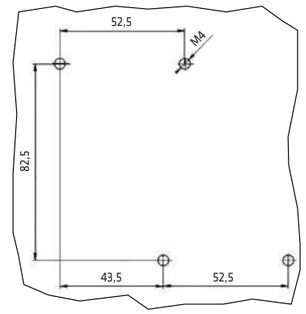

Panel

Box

ACCESSORIES | SQ040 - SQ063 Series
SQ SERIES

PANEL MOUNTING

ADDITIONAL POLES

SERIES	DESCRIPTION	CODE	DIAGRAM
SQ040 SQ063	Additional Pole NO	SQ040AFPR	7 — 8
		SQ063AFPR	
	4th Pole (early make contact)	SQ040ANIR	N — N
		SQ063ANIR	
	Neutral Terminal	SQ040ANPR	N — N
		SQ063ANPR	
	Ground Terminal	SQ040APER	PE — PE
		SQ063APER	

AUXILIARY CONTACTS

SERIES	DESCRIPTION	CODE	DIAGRAM
SQ040 SQ063	AUX 1NC	SQ010AS3R	1NC 1 — 2
	AUX 1NO	SQ010AS4R	1NO 3 — 4

TERMINAL PROTECTION

3 POLES	1 POLE
20900041	20900040

FIXING KEY

FIXING KEY DEVICE FOR FIXING HOLE Ø 22,5 mm
PCF

BASE MOUNTING

ADDITIONAL POLES

SERIES	DESCRIPTION	CODE	DIAGRAM
SQ040 SQ063	Additional Pole NO	SQ040AFPB	7 — 8
		SQ063AFPB	
	4th Pole (early make contact)	SQ040ANIB	N — N
		SQ063ANIB	
	Neutral Terminal	SQ040ANPB	N — N
		SQ063ANPB	
	Ground Terminal	SQ040APEB	PE — PE
		SQ063APEB	

AUXILIARY CONTACTS

SERIES	DESCRIPTION	CODE	DIAGRAM
SQ040 SQ063	AUX 1NC	SQ010AS3B	1NC 1 — 2
	AUX 1NO	SQ010AS4B	1NO 3 — 4

TERMINAL PROTECTION

3 POLES	1 POLE
20900041	20900040

FIXING KEY

FIXING KEY DEVICE FOR FIXING HOLE Ø 22,5 mm
PCF

SHAFT EXTENSIONS

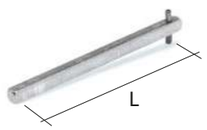

SHAFT EXTENSION □ 6 FOR DOOR INTERLOCK TYPE B	
L 185 mm	20900010
L 300 mm	20900011

ACTUATORS | PANEL MOUNTING TYPE R | SCREW FIXING

ACTUATORS | DOOR LOCKING TYPE B AND K | SCREW FIXING

SQ025 - SQ032 SERIES | EN 60529 - IP65 - UL50 Type 1 - 4 - 4x -12 (◆) Protection NEMA 4x.

- Grey Plate
- Black knob

SERIES	FRONT PLATE SIZE	CODE PANEL MOUNTING TYPE R	LEGEND PLATE
SQ025 - SQ032	□48	001/0001-4V	
		001/0008-4V	

SERIES	FRONT PLATE SIZE	CODE DOOR LOCKING TYPE B ▸	CODE TIPO K	LEGEND PLATE
SQ025 - SQ032	□48	020/0001	-	
		020/0008-90	-	

- Grey Plate
- Black knob
- Locking Facility (Max 1 lock)

SERIES	FRONT PLATE SIZE	CODE PANEL MOUNTING TYPE R	LEGEND PLATE
SQ025 - SQ032	□48	003/0001-4V ◆	
		003/0008-4V ◆	

SERIES	FRONT PLATE SIZE	CODE DOOR LOCKING TYPE B ▸	CODE TIPO K	LEGEND PLATE
SQ025 - SQ032	□48	005/0001 ◆	-	
		005/0008-90 ◆	-	

- Grey Plate
- Black knob
- Locking Facility (Max 3 locks)

SERIES	FRONT PLATE SIZE	CODE PANEL MOUNTING TYPE R	LEGEND PLATE
SQ025 - SQ032	□67	009/0001-4V ◆	

SERIES	FRONT PLATE SIZE	CODE DOOR LOCKING TYPE B ▸	CODE TIPO K	LEGEND PLATE
SQ025 - SQ032	□67	011/0001 ◆	091/0001	

- Yellow Plate
- Red knob

SERIES	FRONT PLATE SIZE	CODE PANEL MOUNTING TYPE R	LEGEND PLATE
SQ025 - SQ032	□48	002/0001-4V	
		002/0008-4V	

SERIES	FRONT PLATE SIZE	CODE DOOR LOCKING TYPE B ▸	CODE TIPO K	LEGEND PLATE
SQ025 - SQ032	□48	030/0001	-	
		030/0008-90	-	

- Yellow Plate
- Red knob
- Locking Facility (Max 1 lock)

SERIES	FRONT PLATE SIZE	CODE PANEL MOUNTING TYPE R	LEGEND PLATE
SQ025 - SQ032	□48	004/0001-4V ◆	
		004/0008-4V ◆	

SERIES	FRONT PLATE SIZE	CODE DOOR LOCKING TYPE B ▸	CODE TIPO K	LEGEND PLATE
SQ025 - SQ032	□48	006/0001 ◆	-	
		006/0008-90 ◆	-	

- Yellow Plate
- Red knob
- Locking Facility (Max 3 locks)

SERIES	FRONT PLATE SIZE	CODE PANEL MOUNTING TYPE R	LEGEND PLATE
SQ025 - SQ032	□67	010/0001-4V ◆	

SERIES	FRONT PLATE SIZE	CODE DOOR LOCKING TYPE B ▸	CODE TIPO K	LEGEND PLATE
SQ025 - SQ032	□67	012/0001 ◆	092/0001	

▶ The actuator for DOOR LOCKING TYPE B includes the shaft □ 5 L85.

ACTUATORS | PANEL MOUNTING TYPE R | SCREW FIXING

ACTUATORS | DOOR LOCKING TYPE B | SCREW FIXING

SQ040 - SQ063 SERIES | EN 60529 - IP65 - UL50 Type 1 - 4 - 4x -12 (◆) Protection NEMA 4x.

3 POLES

- Grey Plate
- Black knob
- Locking Facility (Max 3 locks)

SERIES	FRONT PLATE SIZE	CODE PANEL MOUNTING TYPE R	LEGEND PLATE
SQ040 - SQ063 (3 poles)	□67	049/0001-L ◆	
		049/0008-L ◆	

3 POLES

SERIES	FRONT PLATE SIZE	CODE DOOR LOCKING TYPE B ▸	LEGEND PLATE
SQ040 - SQ063 (3 poles)	□67	321/0001 ◆	
		321/0008 ◆	

- Yellow Plate
- Red knob
- Locking Facility (Max 3 locks)

SERIES	FRONT PLATE SIZE	CODE PANEL MOUNTING TYPE R	LEGEND PLATE
SQ040 - SQ063 (3 poles)	□67	050/0001-L ◆	
		050/0008-L ◆	

SERIES	FRONT PLATE SIZE	CODE DOOR LOCKING TYPE B ▸	LEGEND PLATE
SQ040 - SQ063 (3 poles)	□67	322/0001 ◆	
		322/0008 ◆	

6 POLES

- Grey Plate
- Black knob
- Locking Facility (Max 3 locks)

SERIES	FRONT PLATE SIZE	CODE PANEL MOUNTING TYPE R	LEGEND PLATE
SQ040 - SQ063 (6 poles)	ø78	309/0001	
		309/0008	

6 POLES

SERIES	FRONT PLATE SIZE	CODE DOOR LOCKING TYPE B ▸	LEGEND PLATE
SQ040 - SQ063 (6 poles)	ø78	311/0001	
		311/0008	

- Yellow Plate
- Red knob
- Locking Facility (Max 3 locks)

SERIES	FRONT PLATE SIZE	CODE PANEL MOUNTING TYPE R	LEGEND PLATE
SQ040 - SQ063 (6 poles)	ø78	310/0001	
		310/0008	

SERIES	FRONT PLATE SIZE	CODE DOOR LOCKING TYPE B ▸	LEGEND PLATE
SQ040 - SQ063 (6 poles)	ø78	312/0001	
		312/0008	

▶ The actuator for DOOR LOCKING TYPE B includes the shaft □ 6 L85.

ACTUATORS Ø22 | PANEL MOUNTING TYPE X | CENTRAL FIXING

ACTUATORS Ø22 | PANEL MOUNTING TYPE B | CENTRAL FIXING

SQ025 - SQ032 SERIES | EN 60529 - IP65 - UL50 Type 1 - 4 - 4x -12 (◆) Protection NEMA 4x.

- Grey Plate
- Black knob

SERIES	FRONT PLATE SIZE	CODE PANEL MOUNTING TYPE X	LEGEND PLATE
SQ025 - SQ032	□48	079X/0001	

SERIES	FRONT PLATE SIZE	CODE DOOR LOCKING TYPE B	LEGEND PLATE
SQ025 - SQ032	□48	095/0001	

- Grey Plate
- Black knob
- Locking Facility (Max 1 lock)

SERIES	FRONT PLATE SIZE	CODE PANEL MOUNTING TYPE X	LEGEND PLATE
SQ025 - SQ032	□48	087X/0001 ◆	

SERIES	FRONT PLATE SIZE	CODE DOOR LOCKING TYPE B ▸	LEGEND PLATE
SQ025 - SQ032	□48	077/0001 ◆	

- Grey Plate
- Black knob
- Locking Facility (Max 3 locks)

SERIES	FRONT PLATE SIZE	CODE PANEL MOUNTING TYPE X	LEGEND PLATE
SQ025 - SQ032	□67	089X/0001 ◆	

SERIES	FRONT PLATE SIZE	CODE DOOR LOCKING TYPE B ▸	LEGEND PLATE
SQ025 - SQ032	□67	063/0001 ◆	

- Yellow Plate
- Red knob

SERIES	FRONT PLATE SIZE	CODE PANEL MOUNTING TYPE X	LEGEND PLATE
SQ025 - SQ032	□48	080X/0001	

SERIES	FRONT PLATE SIZE	CODE DOOR LOCKING TYPE B ▸	LEGEND PLATE
SQ025 - SQ032	□48	070/0001	

- Yellow Plate
- Red knob
- Locking Facility (Max 1 lock)

SERIES	FRONT PLATE SIZE	CODE PANEL MOUNTING TYPE X	LEGEND PLATE
SQ025 - SQ032	□48	088X/0001 ◆	

SERIES	FRONT PLATE SIZE	CODE DOOR LOCKING TYPE B ▸	LEGEND PLATE
SQ025 - SQ032	□48	069/0001 ◆	

- Yellow Plate
- Red knob
- Locking Facility (Max 3 locks)

SERIES	FRONT PLATE SIZE	CODE PANEL MOUNTING TYPE X	LEGEND PLATE
SQ025 - SQ032	□67	090X/0001 ◆	

SERIES	FRONT PLATE SIZE	CODE DOOR LOCKING TYPE B ▸	LEGEND PLATE
SQ025 - SQ032	□67	064/0001 ◆	

▶ The actuator for DOOR LOCKING TYPE B includes the shaft □ 5 L85.

ACTUATORS Ø22 | PANEL MOUNTING TYPE X | CENTRAL FIXING

ACTUATORS Ø22 | DOOR LOCKING TYPE B | CENTRAL FIXING

SQ040 - SQ063 SERIES | EN 60529 - IP65 - UL50 Type 1 - 4 - 4x -12 (◆) Protection NEMA 4x.

- Grey Plate
- Black knob
- Locking Facility (Max 3 locks)

SERIES	FRONT PLATE SIZE	CODE PANEL MOUNTING TYPE X	LEGEND PLATE
SQ040 - SQ063	□67	089X/0001 ◆	1 0

SERIES	FRONT PLATE SIZE	CODE DOOR LOCKING TYPE B ▶	LEGEND PLATE
SQ040 - SQ063	□67	065/0001 ◆	1 0

- Yellow Plate
- Red knob
- Locking Facility (Max 3 locks)

SERIES	FRONT PLATE SIZE	CODE PANEL MOUNTING TYPE X	LEGEND PLATE
SQ040 - SQ063	□67	090X/0001 ◆	1 0

SERIES	FRONT PLATE SIZE	CODE DOOR LOCKING TYPE B ▶	LEGEND PLATE
SQ040 - SQ063	□67	066/0001 ◆	1 0

▶ The actuator for DOOR LOCKING TYPE B includes the shaft □ 6 L85.

C01

IP65

- Opening in "0" position.
- Arranged for nr. 8 Pg16 cable glands of which nr. 2 on the bottom.
- **Dimensions:** 120x100x85 mm.
- Black box - Grey cover - Black knob.

SERIES	AC-21A	AC-23A	CODE
	AMP. 690V	AMP. 400V	3 POLES
SQ025	32	25	SQ025003BC01
SQ032	40	32	SQ032003BC01

3 POLES

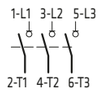

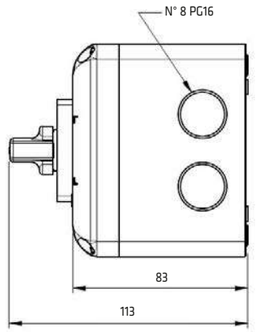

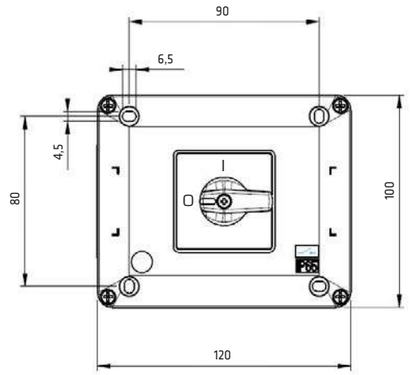

E01

IP65

- Opening in "0" position.
- Arranged with nr. 4 cable glands M25/M32 + nr. 2 closed holes ø22,5 mm on the bottom.
- **Dimensions:** 130x180x106 mm.
- Black box - Grey cover - Black knob.

SERIES	AC-21A	AC-23A	CODE	
	AMP. 690V	AMP. 400V	3 POLES	6 POLES
SQ025	32	25	-	SQ025006BE01
SQ032	40	32	-	SQ032006BE01
SQ040	63	50	SQ040003BE01	-
SQ063	80	75	SQ063003BE01	-

3 POLES

6 POLES

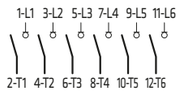

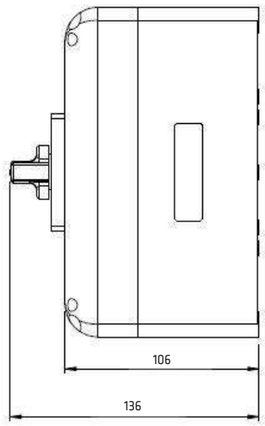

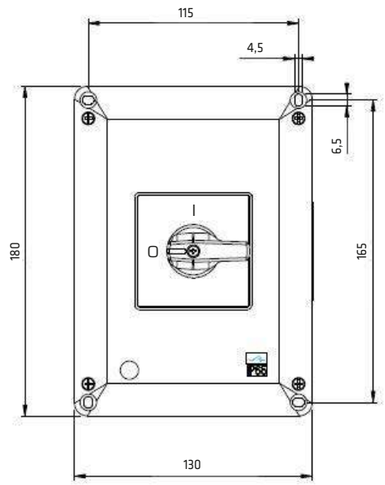

C09

IP65

- Opening in "0" position.
- Arranged for nr. 8 Pg16 cable glands of which nr. 2 on the bottom.
- With locking facility in "0 - OFF" (Max 3 locks).
- **Dimensions:** 120x100x85 mm
- Black box - Grey cover - Black knob.

SERIES	AC-21A	AC-23A	CODE
	AMP. 690V	AMP. 400V	3 POLES
SQ025	32	25	SQ025003BC09
SQ032	40	32	SQ032003BC09

3 POLES

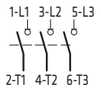

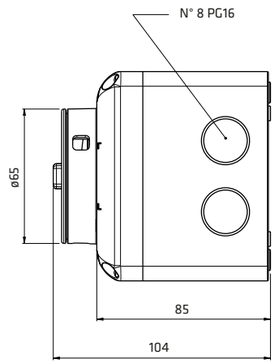

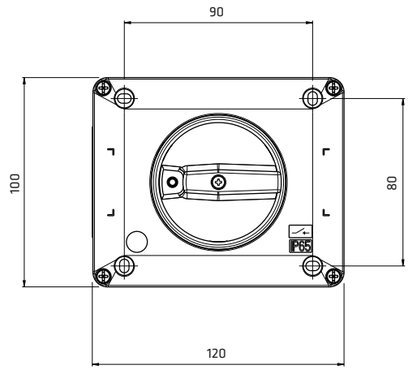

C10

IP65

- Opening in "0" position.
- Arranged for nr. 8 Pg16 cable glands of which nr. 2 on the bottom.
- With locking facility in "0 - OFF" (Max 3 locks).
- **Dimensions:** 120x100x85 mm.
- Black box - Yellow cover - Red knob.

SERIES	AC-21A	AC-23A	CODE
	AMP. 690V	AMP. 400V	3 POLES
SQ025	32	25	SQ025003BC10
SQ032	40	32	SQ032003BC10

3 POLES

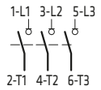

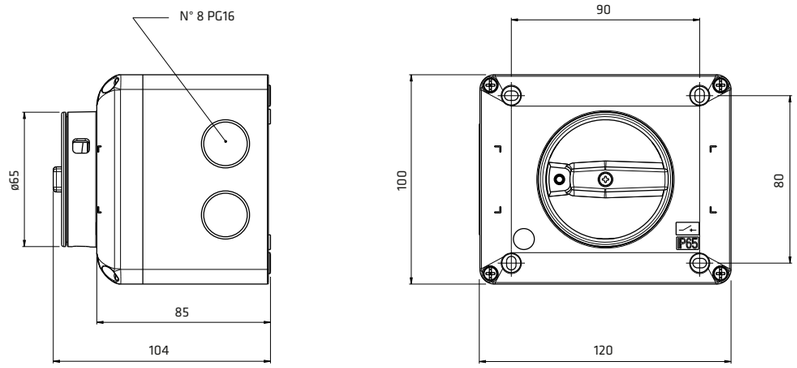

E09

IP65

- Opening in "0" position.
- Arranged with nr. 4 cable glands M25/M32 + nr. 2 closed holes ø22,5 mm on the bottom.
- With locking facility in "0 - OFF" (Max 3 locks).
- **Dimensions:** 130x180x106 mm.
- Black box - Grey cover - Black knob.

SERIES	AC-21A	AC-23A	CODE	
	AMP. 690V	AMP. 400V	3 POLES	6 POLES
SQ025	32	25	-	SQ025006BE09
SQ032	40	32	-	SQ032006BE09
SQ040	63	50	SQ040003BE09	-
SQ063	80	75	SQ063003BE09	-

3 POLES

6 POLES

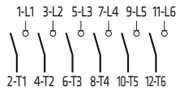

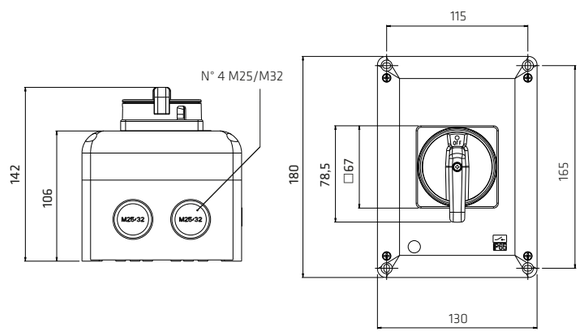

SQ025006BE09
SQ032006BE09

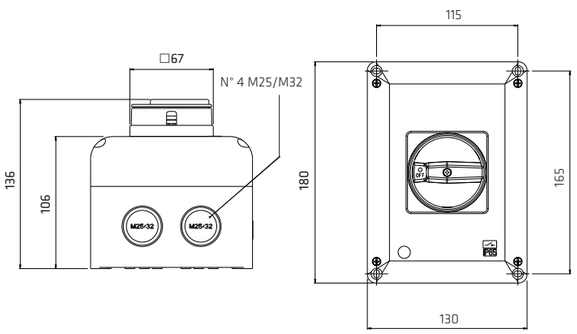

SQ040003BE09
SQ063003BE09

E10

IP65

- Opening in "0" position.
- Arranged with nr. 4 cable glands M25/M32 + nr. 2 closed holes ø22,5 mm on the bottom.
- With locking facility in "0 - OFF" (Max 3 locks).
- **Dimensions:** 130x180x106 mm.
- Black box - Yellow cover - Red knob.

SERIES	AC-21A	AC-23A	CODE	
	AMP. 690V	AMP. 400V	3 POLES	6 POLES
SQ025	32	25	-	SQ025006BE10
SQ032	40	32	-	SQ032006BE10
SQ040	63	50	SQ040003BE10	-
SQ063	80	75	SQ063003BE10	-

3 POLES

6 POLES

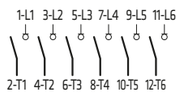

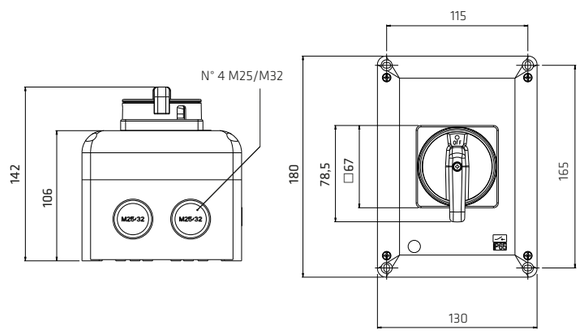

SQ025006BE10
SQ032006BE10

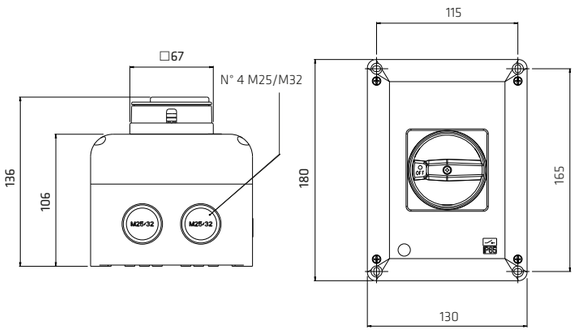

SQ040003BE10
SQ063003BE10

C41

IP65 ⧈

- Opening in "0" position.
- Complete with nr. 2 M32 and nr. 2 M40 cable gland plugs.
- With locking facility in "0 - OFF" (Max 3 locks).
- **Dimensions:** 140x230x114 mm
- Black box - Yellow cover - Red knob.
- UL Approval.

SERIES	AC-21A	AC-23A	CODE
	AMP. 690V	AMP. 400V	3 POLES
SQ063	80	75	SQ063003BC41

3 POLES

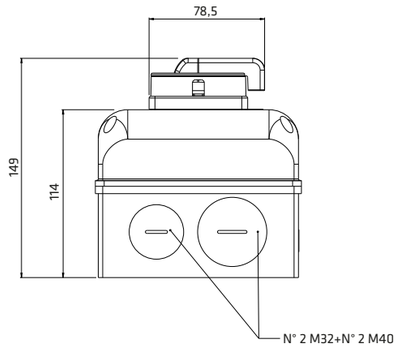

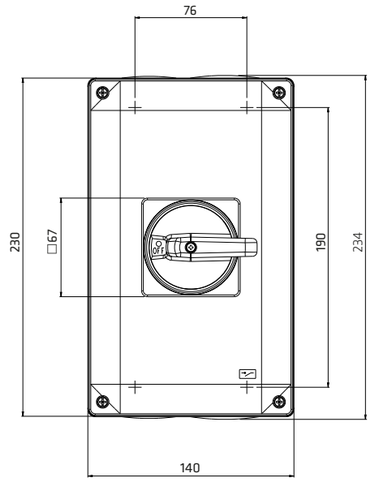

C42

IP65 ⧈

- Opening in "0" position.
- Complete with nr. 2 M32 and nr. 2 M40 cable gland plugs.
- With locking facility in "0 - OFF" (Max 3 locks).
- **Dimensions:** 140x230x114 mm.
- Black box - Grey cover - Black knob.
- UL Approval.

SERIES	AC-21A	AC-23A	CODE
	AMP. 690V	AMP. 400V	3 POLES
SQ063	80	75	SQ063003BC42

3 POLES

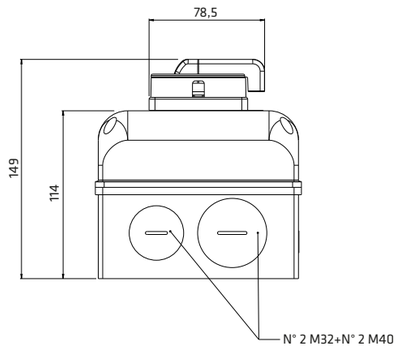

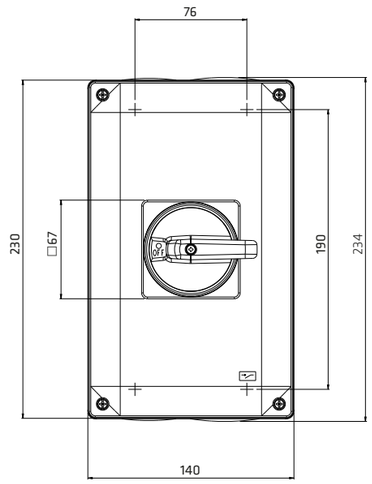

A09

IP65 ☐

- Opening in "0" position.
- Complete with nr. 2 M20 + nr. 2 M25 cable glands plugs.
- With locking facility in "0 - OFF" (Max 3 locks).
- **Dimensions:** 105x140x85 mm.
- Black box - Grey cover - Black knob.

SERIES	AC-21A	AC-23A	CODE
	AMP. 690V	AMP. 400V	3 POLES
SQ025	32	25	SQ025003DA09
SQ032	40	32	SQ032003DA09

3 POLES

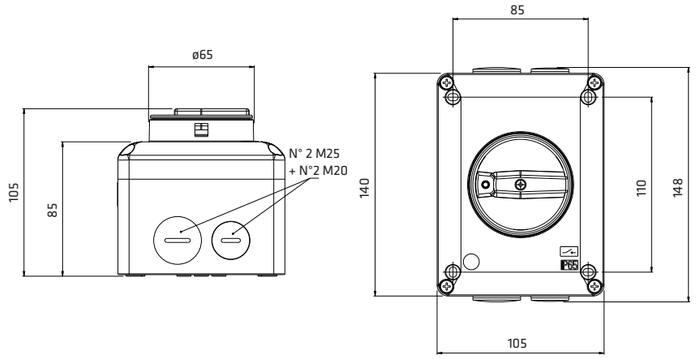

A10

IP65 ☐

- Opening in "0" position.
- Complete with nr. 2 M20 + nr. 2 M25 cable glands plugs.
- With locking facility in "0 - OFF" (Max 3 locks).
- **Dimensions:** 105x140x85 mm.
- Black box - Yellow cover - Red knob.

SERIES	AC-21A	AC-23A	CODE
	AMP. 690V	AMP. 400V	3 POLES
SQ025	32	25	SQ025003DA10
SQ032	40	32	SQ032003DA10

3 POLES

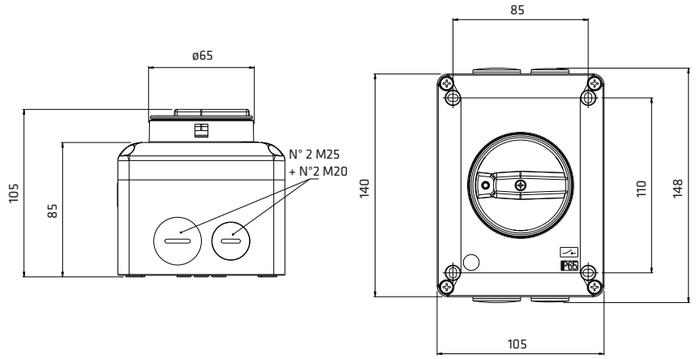

AB9

IP65 ☐

- Opening in "0" position.
- Complete with nr. 2 M40 cable glands plugs.
- With locking facility in "0 - OFF" (Max 3 locks).
- **Dimensions:** 150x200x110 mm.
- Black box - Grey cover - Black knob.

SERIES	AC-21A	AC-23A	CODE
	AMP. 690V	AMP. 400V	3 POLES
SQ040	63	50	SQ040003BAB9
SQ063	80	75	SQ063003BAB9

3 POLES

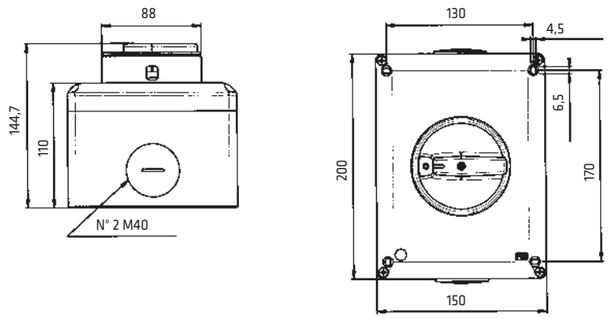

AB0

IP65 ☐

- Opening in "0" position.
- Complete with nr. 2 M40 cable glands plugs.
- With locking facility in "0 - OFF" (Max 3 locks).
- **Dimensions:** 150x200x110 mm.
- Black box - Yellow cover - Red knob.

SERIES	AC-21A	AC-23A	CODE
	AMP. 690V	AMP. 400V	3 POLES
SQ040	63	50	SQ040003BAB0
SQ063	80	75	SQ063003BAB0

3 POLES

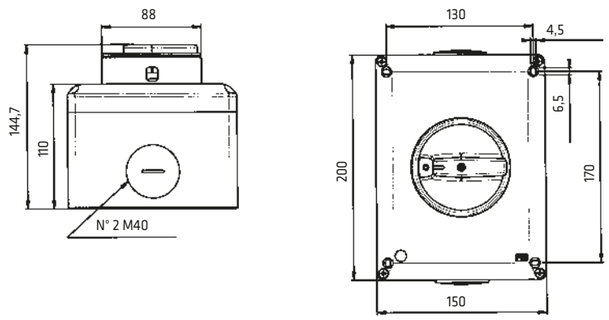

ENCLOSURES | SQ Series
SQ SERIES

THERMOPLASTIC ENCLOSURES

BF3/FNGO

THERMOPLASTIC BOX

IP65

- Bodies - Panel Mounting Type R.
- Arranged for nr. 8 Pg 16 - M20 cable glands.
- **Dimensions:** 120x100x85 mm.
- Black box - Grey cover.

SERIES	EXECUTION	CODE
	N° POLES MAX	
SQ025 SQ032	4	BF3/FNGO

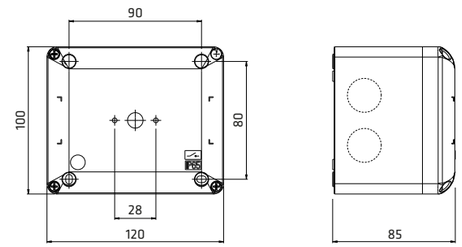

BF4/DNGO

THERMOPLASTIC BOX

IP65

- Bodies - Base Mounting Type B.
- Arranged for nr. 4 M25/M32 cable glands.
- **Dimensions:** 130x180x106 mm.
- Black box - Grey cover.

SERIES	EXECUTION	CODE
	N° POLES MAX	
SQ025 SQ032	6	BF4/DNGO
SQ040 SQ063	4	

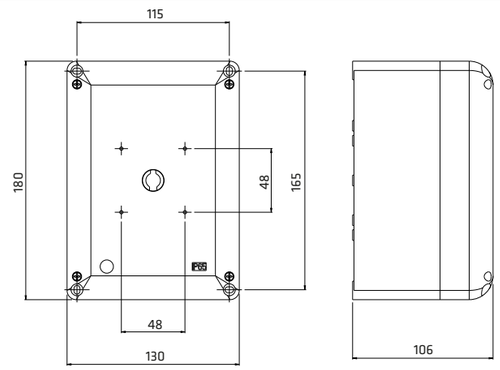

METAL ENCLOSURES

BNA/ONGA

METAL BOX
COVER WITHOUT HOLES

IP65

- Bodies - Panel Mounting Type R and Base Mounting Type B.
- Complete with nr. 2 M20 and nr. 2 M25 cable glands plugs.
- **Dimensions:** 105x140x85 mm.
- Black box - Grey cover.

SERIES	EXECUTION	CODE
	N° POLES MAX	
SQ025 SQ032	4	BNA/ONGA
SQ040 SQ063	3	

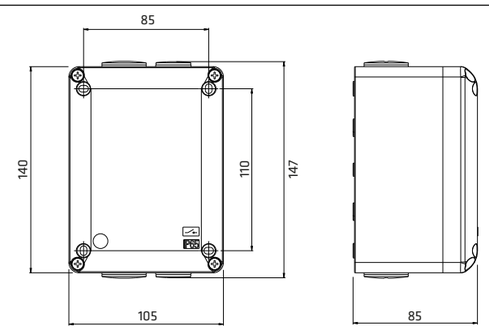

BNA/ENGA

METAL BOX
COVER WITHOUT HOLES

IP65

- Bodies - Panel Mounting Type R and Base Mounting Type B.
- Complete with nr. 2 M40 cable glands.
- **Dimensions:** 150x200x110 mm.
- Black box - Grey cover.

SERIES	EXECUTION	CODE
	N° POLES MAX	
SQ040 SQ063	4	BNA/ENGA

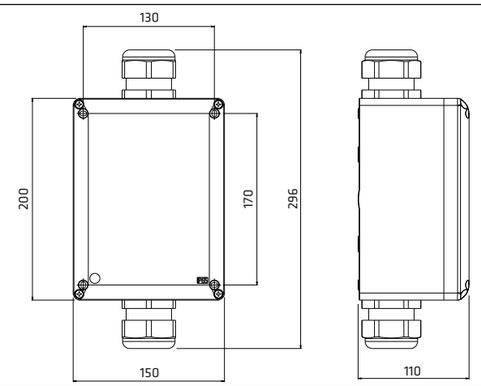

PANEL MOUNTING

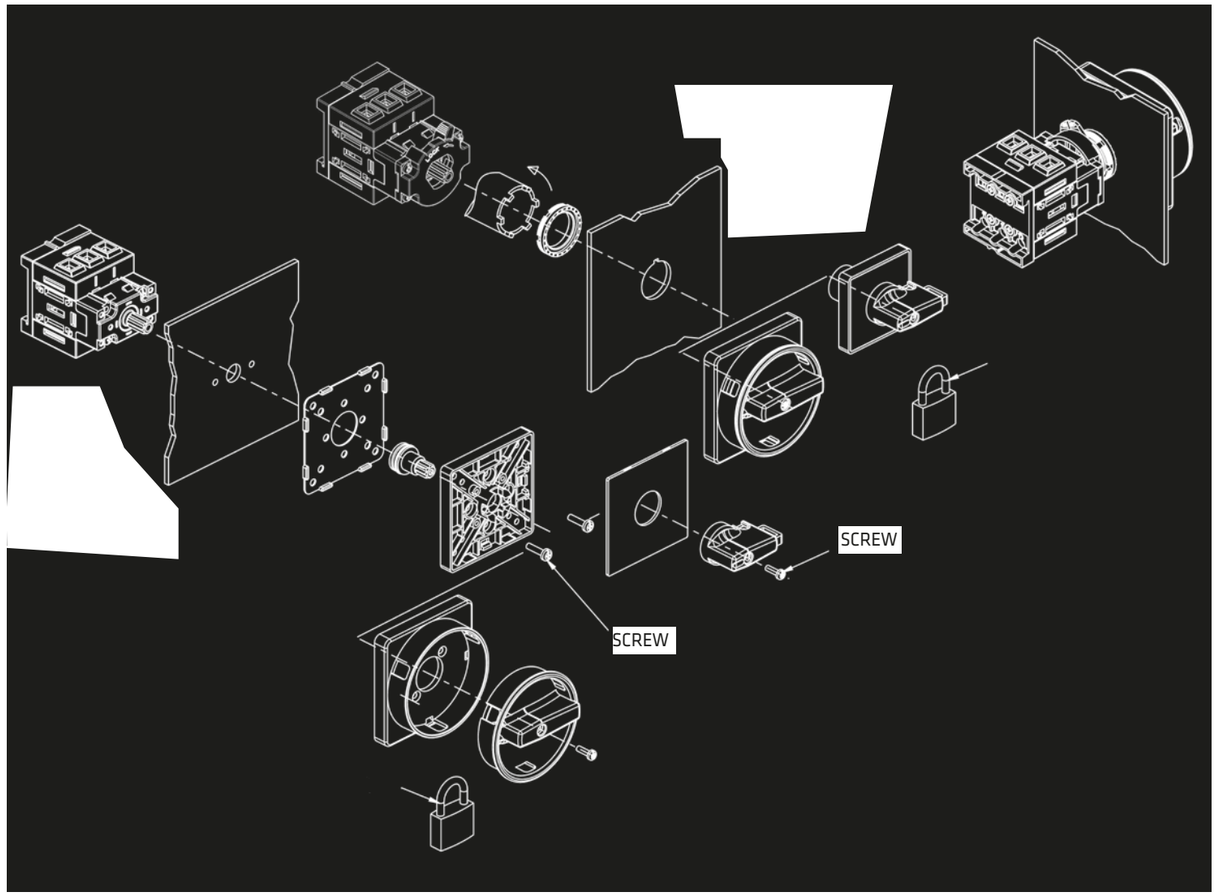

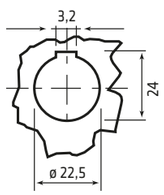

Panel

ø22,5 mm
Hole central fixing

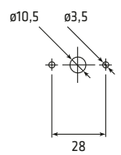

Panel

Screw fixing
SQ025-SQ032 Series
2-3 poles

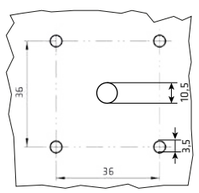

Panel

Screw fixing
SQ025-SQ032 Series
6 poles

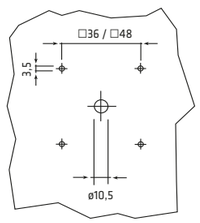

Panel

Screw fixing
SQ040-SQ063 Series
2-3 poles

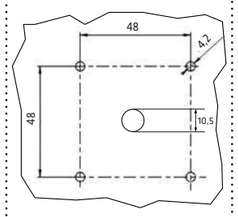

Panel

Screw fixing
SQ040-SQ063 Series
6 poles

BASE MOUNTING

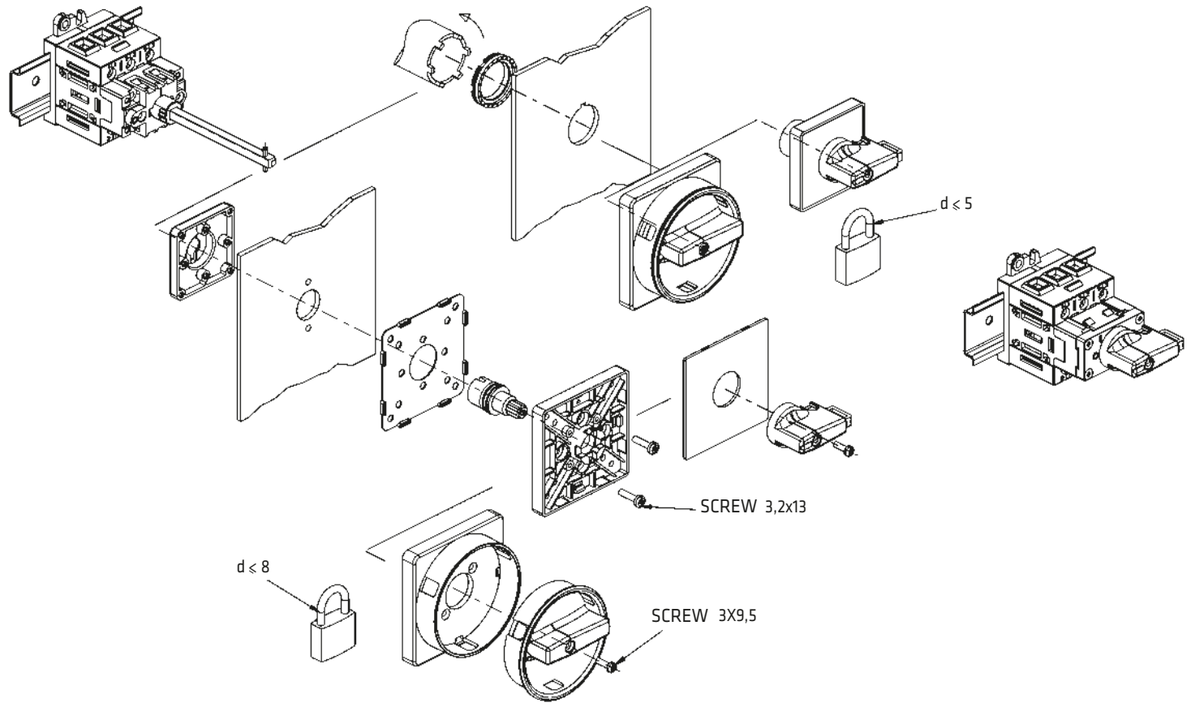

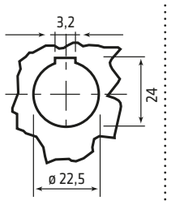

Panel

ø22,5 mm
Hole central fixing

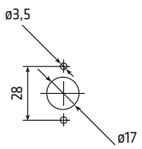

Panel

Screw fixing
SQ025-SQ032 Series
SQ040-SQ063 Series

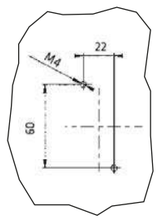

Box

Screw fixing
SQ025-SQ032 Series
2-3 poles

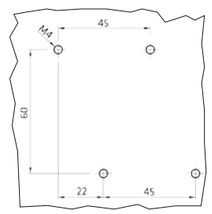

Box

Screw fixing
SQ025-SQ032 Series
6 poles

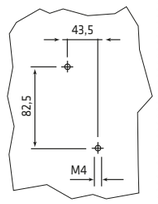

Box

Screw fixing
SQ040-SQ063 Series
2-3 poles

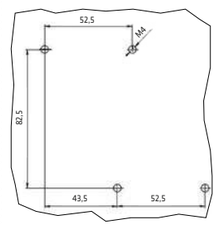

Box

Screw fixing
SQ040-SQ063 Series
6 poles

GIOVENZANA
INTERNATIONAL B.V.

REGOLUS SWITCH DISCONNECTORS
SQN Series

EXECUTION OVERVIEW AND GENERAL CHARACTERISTICS

REGOLUS SWITCH DISCONNECTORS

The disconnectors Regolus Series, built to the most stringent European and international standards (**IEC / EN 60947-3, UL508**), meet all the safety requirements.

SQN SERIES

The disconnectors modular SQN Series from 125A to 160A, 3 poles have the possibility to install additional poles, auxiliary contacts and terminal IP20 protections.

GENERAL CHARACTERISTICS

- Rated current from 125A to 160A
- 3 Poles (AC/DC)
- Additional pole (4th pole) and auxiliary contact
- Mechanism with two stable positions ON-OFF
- Locking handle (OFF position)
- Independent manual operation (according to EN 60947-3)
- Nr. 6 air-openings available to optimize heat dissipation
- Optimized for DIN rail (box) and panel mounting

AVAILABLE VERSIONS

- Switch disconnectors 6 poles and changeover
- Panel mounting Screw Fixing
- Base Mounting
- Door locking
- Direct command

COMPLY WITH RULES

IEC/EN 60947-3, UL508.

SERIES			SQN125 - SQN160
Material Group		**EN 60947-1**	II
Pollution Grade		**EN 60947-1**	3
Flammability		**UL94**	VO (Live Electric parts)
Ambient Temperature		**°C**	Operating: -25 +55
		°C	Storage: -30 +70
Climate Withstand		**IEC 68 part 2-3**	Constant Hot Damp
		IEC 68 part 2-30	Cyclical Hot Damp
Connections	Terminal Block Caliber	**EN60947-1**	A11
	Terminal Screw		M 8
	Screwing Torque	**EN60947-1**	6 Nm
		UL508	53 lb. in. (6 Nm)
Connectable Section	Flexible Conductors n°1 min/max	**mm²**	6 - 25
		AWG	10 - 2
	Solid Conductors n°1 min/max	**mm²**	10 - 35
		AWG	10 - 2
Contacts			Slow Opening Double-Break
Opening Angles			90°
Mechanical Lifetime at 120 operations per hour		**nr. of cycles**	100.000
Maximum Altitude	Until 2000 mt	**Derating**	Standard
	Over 2000 mt	**Voltage Derating (V)**	< 1% each 100 mt
		Power Derating (A)	< 1% each 1000 mt

CERTIFICATIONS		SQN125	SQN160
CE	CE mark - Europa	■	■
cULus	cUL Listed - USA and Canada	●	●

TECHNICAL CHARACTERISTICS

EN 60947-3 CHARACTERISTICS			SQN125	SQN160
Rated operating voltage Ue		**V**	690	690
Rated insulation voltage Ui		**V**	800	800
Rated impulse withstand voltage Uimp (sectionable)		**kV**	8	8
Rated thermal current Ith		**A**	125	160
Rated thermal current in enclosed Ithe		**A**	125	160
Frequency		**Hz**	50/60	50/60

RATED OPERATING CURRENT Ie: alternate current			SQN125	SQN160
AC-21A Switching resistive loads with light overloads	**690V**	**A**	125	160
AC-22A Switching mixed resistive and inductive loads at light overloads	**500V**	**A**	125	160
	690V	**A**	125	160
AC-23A Periodic switching of motors 3 phases - 3 poles	**230V**	**A**	-	-
	400V	**A**	125	160
	500V	**A**	100	125
	690V	**A**	80	100
DC-21B (4P Series positive opening)	**600V**	**A**	10	10

SHORT CIRCUIT CHARACTERISTICS			SQN125	SQN160
Rated short-time short circuit withstand current Icw (1 s)		**A**	3000	3000
Rated short circuit making capacity Icm		**A**	4500	4500
Conditional rated short circuit withstand current		**kA**	10 | 10	10 | 10
Fuse rating gG	**500V**	**A**	-	-
	690V	**A**	125	125

UL 508 CHARACTERISTICS			SQN125	SQN160
General Use	**600V AC**	**A**	125	150
Standard motor load 3 phases - 3 poles	**240V AC**	**HP**	25	25
	480V AC	**HP**	50	50
	600V AC	**HP**	60	60

Box Execution

Panel Mounting Execution

PANEL MOUNTING

TYPE R

- Screw fixing.
- See page 51 for combinable actuators.

SERIES	AC-21A	AC-23A	CODE
	AMP. 690V	AMP. 400V	3 POLES
SQN125	125	125	SQN125003R
SQN160	160	160	SQN160003R

3 POLES

Dimensions and details of fixing holes

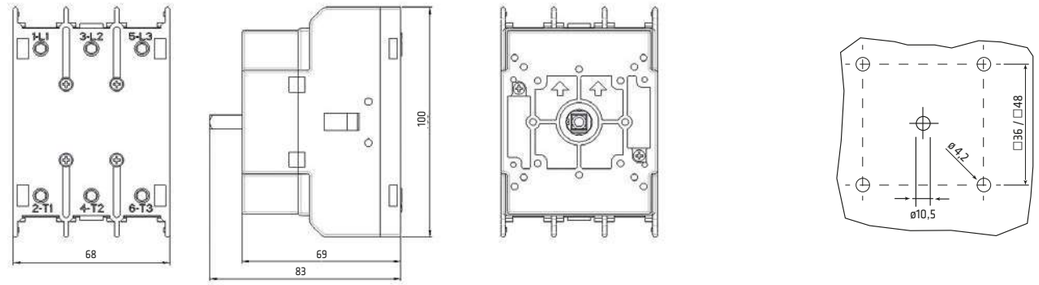

BASE MOUNTING

TYPE B

- Direct command and Door Locking
- Fixing box DIN RAIL DIN-EN 50022-35.
- Black knob locking (1 lock) in "0-OFF" position.
- See page 51 for combinable actuators.

SERIES	AC-21A	AC-23A	CODE
	AMP. 690V	AMP. 400V	3 POLES
SQN125	125	125	SQN125003B
SQN160	160	160	SQN160003B

3 POLES

Dimensions and details of fixing holes

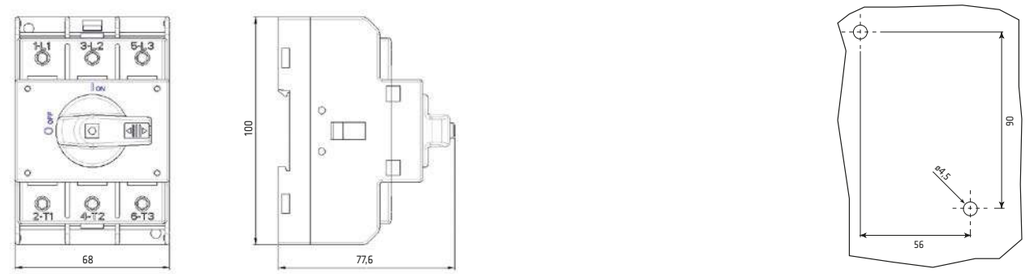

SWITCH D. 6 POLES & CHANGEOVERS 3 POLES

TYPE R

- Screw fixing.
- See page 51 for combinable actuators.

SERIES	AC-21A	AC-23A	PANEL MOUNTING CODE	
	AMP. 690V	AMP. 400V	6 POLES	CHANGEOVER 3 POLES
SQN125	125	125	SQN125006R	SQN125033R
SQN160	160	160	SQN160006R	SQN160033R

90°

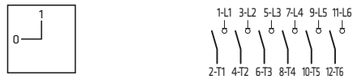

6 POLES

3 POLES

TYPE B

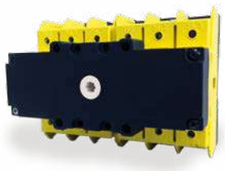

- Fixing box DIN RAIL DIN-EN 50022-35.
- Suitable for Door Locking actuators with shaft fixed on switch disconnectors body.
- See page 51 for combinable actuators.

SERIES	AC-21A	AC-23A	BASE MOUNTING CODE	
	AMP. 690V	AMP. 400V	6 POLI	CHANGEOVER 3 POLES
SQN125	125	125	SQN125006B	SQN125033B
SQN160	160	160	SQN160006B	SQN160033B

Dimensions and details of fixing holes

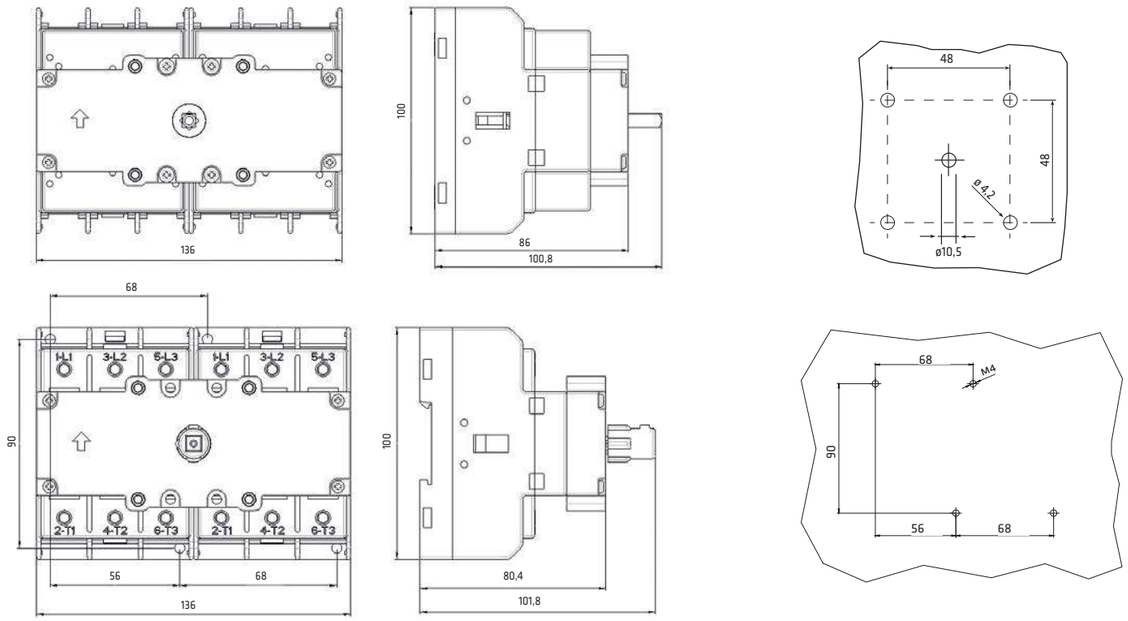

ADDITIONAL POLES

PANEL MOUNTING

SERIES	DESCRIPTION	CODE	DIAGRAM
SQN125 SQN160	Additional Pole NO	SQN125AFPR SQN160AFPR	7 — 8
	4th Pole (early make contact)	SQN125ANIR SQN160ANIR	N — N
	Neutral Terminal	SQN125ANPR SQN160ANPR	N — N
	Ground Terminal	SQN125APER SQN160APER	PE — PE

BASE MOUNTING

SERIES	DESCRIPTION	CODE	DIAGRAM
SQN125 SQN160	Additional Pole NO	SQN125AFPB SQN160AFPB	7 — 8
	4th Pole (early make contact)	SQN125ANIB SQN160ANIB	N — N
	Neutral Terminal	SQN125ANPB SQN160ANPB	N — N
	Ground Terminal	SQN125APEB SQN160APEB	PE — PE

AUXILIARY CONTACTS

PANEL MOUNTING

SERIES	DESCRIPTION	CODE	DIAGRAM
SQN125 SQN160	AUX 1NC	SQ010AS5R	1NC 1 — 2
	AUX 1NO	SQ010AS6R	1NO 3 — 4

BASE MOUNTING

SERIES	DESCRIPTION	CODE	DIAGRAM
SQN125 SQN160	AUX 1NC	SQ010AS5B	1NC 1 — 2
	AUX 1NO	SQ010AS6B	1NO 3 — 4

TERMINAL PROTECTION AND SHAFT EXTENSION

PANEL & BASE MOUNTING

3 POLES	1 POLE
20900064	20900065

BASE MOUNTING

SHAFT EXTENSION □6 FOR DOOR INTERLOCK	
L 185 mm	20900010
L 300 mm	20900011

SQN125 - SQN160 SERIES | EN 60529 - IP65 - UL50 Type 1 - 4 - 4x -12 (◆) Protection NEMA 4x.

ACTUATORS

- Grey Plate
- Black knob
- Locking Facility (Max 3 locks)

SERIE	FRONT PLATE SIZE	PANEL MOUNTING TYPE R CODE	DOOR LOCKING TYPE B CODE ▸	LEGEND PLATE
SQN125 - SQN160	ø78	309/0001	311/0001	
		309/0008	311/0008	

- Yellow Plate
- Red knob
- Locking Facility (Max 3 locks)

SERIE	FRONT PLATE SIZE	PANEL MOUNTING TYPE R CODE	DOOR LOCKING TYPE B CODE ▸	LEGEND PLATE
SQN125 - SQN160	ø78	310/0001	312/0001	
		310/0008	312/0008	

- Grey Plate
- Black knob
- Locking Facility (Max 3 locks)

SERIES	FRONT PLATE SIZE	PANEL MOUNTING TYPE R CODE	DOOR LOCKING TYPE B CODE ▸	LEGEND PLATE
SQN125 - SQN160	□67	319/0001 ◆	321/0001	
		319/0008 ◆	321/0008	

- Yellow Plate
- Red knob
- Locking Facility (Max 3 locks)

SERIES	FRONT PLATE SIZE	PANEL MOUNTING TYPE R CODE	DOOR LOCKING TYPE B CODE ▸	LEGEND PLATE
SQN125 - SQN160	□67	320/0001 ◆	322/0001	
		320/0008 ◆	322/0008	

▶ The actuator for DOOR LOCKING TYPE B includes the shaft □ 6 L85.

TF8

IP65 ▢

- Opening in "0" position.
- Red knob locking (Max 3 locks) in "0-OFF" position.
- Dimensions: 310x230x115mm.
- Grey box & cover. Red/yellow actuator.

SERIES	AC-21A	AC-23A	CODE
	AMP. 690V	AMP. 400V	3 POLES
SQN125	125	125	SQN125003BTF8
SQN160	160	160	SQN160003BTF8

3 POLES

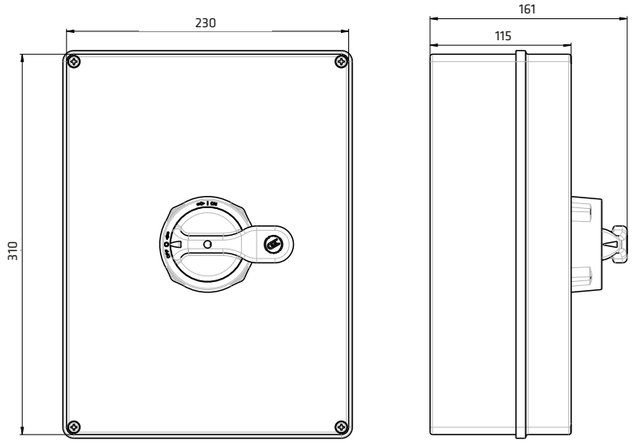

TF4

IP65 ▢

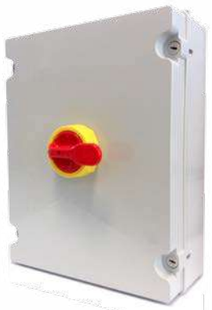

- Opening in "0" position.
- Red knob locking (Max 3 locks) in "0-OFF" position.
- Dimensions: 376x300x125mm.
- Grey box & cover. Red/yellow actuator.

SERIES	AC-21A	AC-23A	CODE
	AMP. 690V	AMP. 400V	6 POLES
SQN125	125	125	SQN125006BTF4
SQN160	160	160	SQN160006BTF4

6 POLES

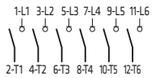

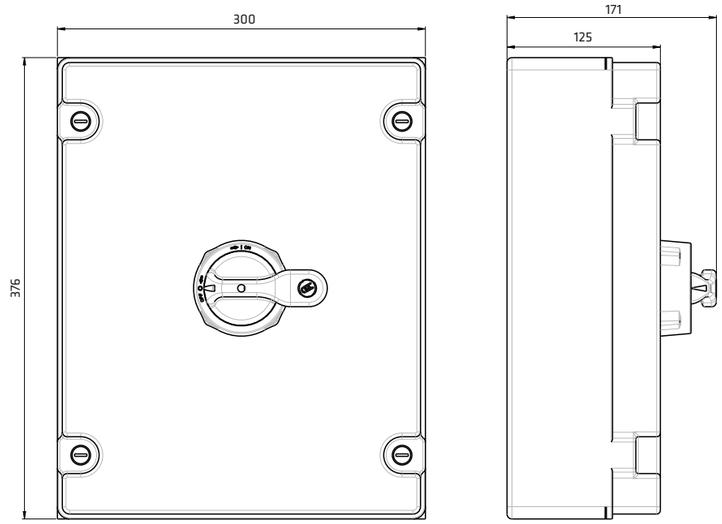

▸ **AVAILABLE ON REQUEST ALSO METAL AND STAINLESS STEEL ENCLOSURES.**

PANEL MOUNTING

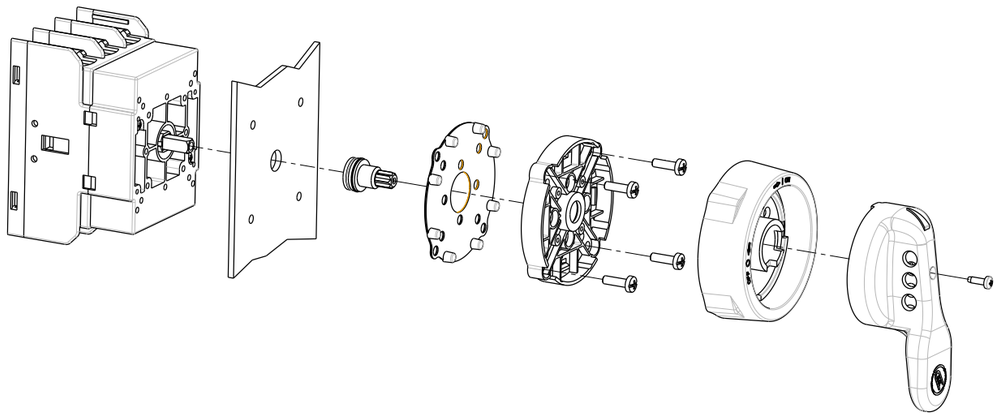

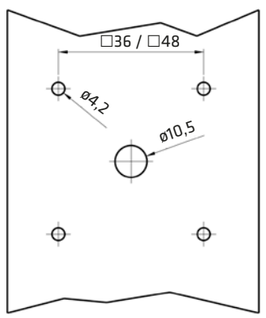

Panel

Screw fixing
3-6 poles

BASE MOUNTING

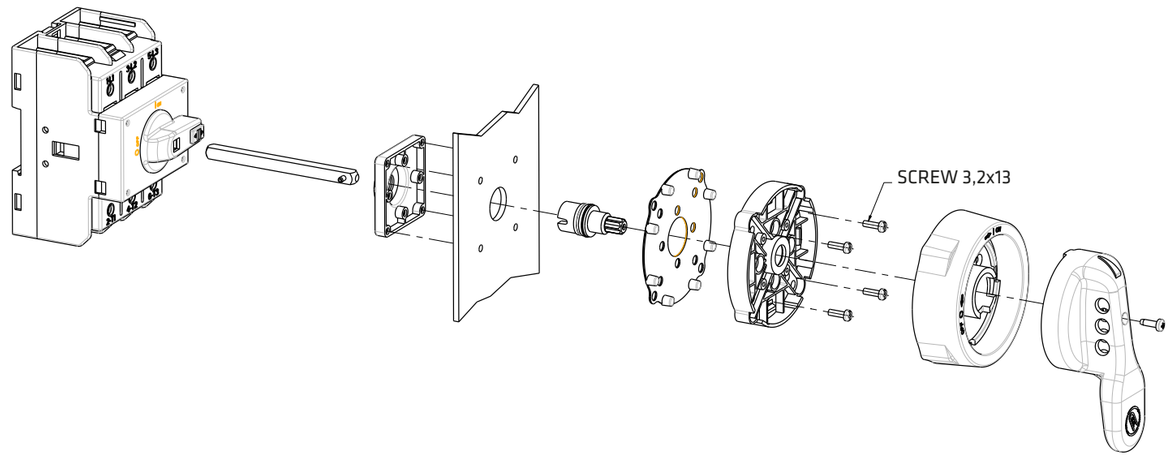

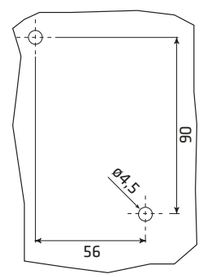

Base

Screw fixing
3 poles

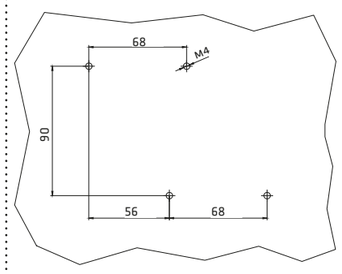

Base

Screw fixing
6 poles

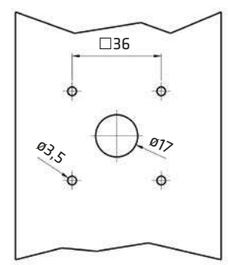

Panel

Screw fixing
3-6 poles

GIOVENZANA
INTERNATIONAL B.V.

REGOLUS SWITCH DISCONNECTORS
SE Series

EXECUTION OVERVIEW AND GENERAL CHARACTERISTICS

REGOLUS SWITCH DISCONNECTORS

The disconnectors Regolus Series, built to the most stringent European and international standards (**IEC / EN 60947-3, UL508**), meet all the safety requirements.

The long industrial experience combined with the use of the best materials, plant and most modern design tools, enables us to produce a range of high quality equipment placing Giovenzana as synonymous of reliability, operational reliability and durability of its products.

SE SERIES

The disconnectors modular SE Series from 2 to 4 poles, from 32A to 100A allows to install IP20 terminal protections and auxiliary contacts (SE16-SE32 only).

AVAILABLE VERSIONS

- Panel mounting Screw Fixing
- Panel mounting Ø22,5mm Central Hole Fixing (SE16-SE32 only)
- Base Mounting
- Door locking

COMPLY WITH RULES

- IEC/EN 60947-3, UL508.
- IEC/EN 60947-5-1, UL508 (auxiliary contacts).

SERIES			SE16 - SE32	SE63 - SE80 SE100	AUXILIARY CONTACTS
Protection class	control	**EN 60529 (UL50 ◆) NEMA 4X**	IP65 (Type 1 - 4 - 4X)	IP65 (Type 1 - 4 - 4X)	-
	terminals	**EN 60529**	IP20	IP20	IP20
Material Group		**EN 60947-1**	II	II	II
Pollution class		**EN 60947-1**	3	3	3
Flammability		**UL94**	VO (Live Electric parts)	VO (Live Electric parts)	VO (Live Electric parts)
Ambient Temperature		**°C**	Operating: -25 +55	Operating: -25 +55	Operating: -25 +55
		°C	Storage: -30 +70	Storage: -30 +70	Storage: -30 +70
Climate Withstand		**IEC 68 part 2-3**	Constant Hot Damp	Constant Hot Damp	Constant Hot Damp
		IEC 68 part 2-30	Cyclical Hot Damp	Cyclical Hot Damp	Cyclical Hot Damp
Connections	Terminal Block Caliber	**EN60947-1**	A6	A8	A2
	Terminal Screw		M4	M5	M3,5
	Screwing Torque	**EN60947-1**	1,2 Nm	3 Nm	0,8 Nm
		UL508	7 lb. in. (0,8 Nm)	32,0 lb. in. (3,6 Nm)	12 lb. in.
Connectable Section	Flexible Conductors n°1 min/max	**mm²**	1,5 - 10	6 - 25	1 - 2,5
		AWG	16 - 8	10 - 2	18 - 12
	Solid Conductors n°1 min/max	**mm²**	1,5 - 10	10 - 35	1 - 2,5
		AWG	16 - 8	10 - 2	18 - 12
Contacts			Slow opening Double-Break	Slow opening Double-Break	Slow opening Double-Break Positive opening for NC ➲
Opening Angles			90°	90°	-
Mechanical Lifetime at 120 operations per hour		**nr. of cycles**	100.000	100.000	1.500.000
Maximum Altitude	Until 2000 mt	**Derating**	Standard	Standard	-
	Over 2000 mt	**Voltage Derating (V)**	< 1% ogni 100 m	< 1% ogni 100 m	-
		Power Derating (A)	< 1% ogni 1000 m	< 1% ogni 1000 m	-

CERTIFICATIONS	SE 16	SE 32	SE 63	SE 80	SE 100	AUXILIARY CONTACTS
CE Mark - Europe	■	■	■	■	■	■
cUL Listed - USA and Canada	●	●	●	●	●	●
Istituto Marchio Qualità (IMQ) - Italy	●	●	●	●		●
CCC China	●	●	●	●		●
EAC Russia	●	●	●	●		●

TECHNICAL CHARACTERISTICS

EN 60947-3 CHARACTERISTICS		SE16	SE32	SE63	SE80	SE100	AUXILIARY CONTACTS
Rated operating voltage Ue	**V**	690*	690*	690	690	690	690
Rated insulation voltage Ui	**V**	690*	690*	690	690	690	690
Rated impulse withstand voltage Uimp (sectionable)	**kV**	4*	4*	8	8	8	4
Rated thermal current Ith	**A**	(30*) 32	40*	63*	86*	100	16
Rated thermal current in enclosed Ithe	**A**	(30*) 32	40*	63*	86*	86	10
Frequency	**Hz**	50	50	50	50	50	50/60

RATED OPERATING CURRENT Ie: alternate current			SE16	SE32	SE63	SE80	SE100	AUXILIARY CONTACTS
AC-21A Switching resistive loads with light overloads	**690V**	**A**	(30*) 32	(32*) 40	63*	80*	100	AC-15 240V - 5A
AC-22A Switching mixed resistive	**500V**	**A**	-	-	-	-	100	DC-13
and inductive loads at light overloads	**690V**	**A**	(20*) 25	32*	63*	80*	86	250V - 0,44A
AC-23A Periodic switching of motors	**230V**	**A/kW**	25/7,5	32/10	50/15	63/18,5	70/22	-
3 phases - 3 poles	**400V**	**A/kW**	25/15	32/18,5	50/30	60/33	67/37	-
	500V	**A/kW**	25/15	32/22	50/37	60/40	67/45	-
	690V	**A/kW**	(16*)20/18,5	25*/22	32/30	35/33	38/37	-
AC3 Starting of cage motors	**230V**	**A/kW**	22/7,5	30/9	40/11	50/15	60/18,5	-
(interruption hile running)	**400V**	**A/kW**	22/11	30/15	40/22	50/25	55/30	-
3 phases - 3 poles	**500V**	**A/kW**	22/11	30/18,5	40/30	50/33	55/37	-
	690V	**A/kW**	(12*)22/11	(20*)22/18,5	25/22	27/25	32/30	-
Nominal interruption power **AC-23A**	**230V**	**A**	200	256	400	504	560	-
(cosfi 0,45)	**400V**	**A**	200	256	400	480	536	-
	500V	**A**	200	256	400	480	536	-
	690V	**A**	160	200	256	280	304	-

SHORT CIRCUIT CHARACTERISTICS			SE16	SE32	SE63	SE80	SE100	AUXILIARY CONTACTS
Rated short-time short circuit withstand current Icw (1 s)		**A**	400*	400*	1500	1500	1500	-
Rated short circuit making capacity Icm		**A**	1500*	1500*	2840	2840	2840	-
Conditional rated short circuit withstand current		**kA**	10*	10*	10*	10*	10	1
Fuse rating gG	**500V**	**A**	-	-	-	-	100	10
	690V	**A**	40*	40*	(80*)63	(80*)	-	-

UL 508 CHARACTERISTICS			SE16	SE32	SE63	SE80	SE100	CONTATTI AUSILIARI
General Use	**600V AC**	**A**	32	40	63	80	100	HD A600 AC Q600 DC
Standard motor load	**120V AC**	**HP (FLA)**	1,5 (20)	2 (24)	3 (34)	3 (34)	3 (34)	-
single phase - 2 poles	**200-208V AC**	**HP**	2	3	-	-	-	-
	240V AC	**HP (FLA)**	3 (17)	5 (28)	7,5 (40)	7,5 (40)	10 (50)	-
Standard motor load	**200-208V AC**	**HP**	7,5	10	-	-	-	-
3 phases - 3 poles	**240V AC**	**HP (FLA)**	7,5 (22)	10 (28)	10 (28)	10 (28)	10 (28)	-
	480V AC	**HP (FLA)**	10 (14)	15 (21)	20 (27)	25 (34)	25 (34)	-
	600V AC	**HP (FLA)**	15 (17)	20 (22)	25 (27)	30 (32)	30 (32)	-

◆ See ACTUATORS from page 68 to page 73. ■ Comply to the requirements by passed test. ● Approved.

* IMQ values

PANEL MOUNTING

Dimensions and details of fixing holes

TYPE R

- Screw fixing.
- See page 68 for combinable actuators.

SERIES	AC-21A AMP. 690V	AC-23A AMP. 400V	CODE 2 POLES	CODE 3 POLES	CODE 4 POLES
SE16	32	25	SE1610F2R	SE163003R	SE163004R
SE32	40	32	SE3210F2R	SE323003R	SE323004R

2 POLES

3 POLES

4 POLES

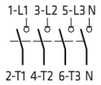

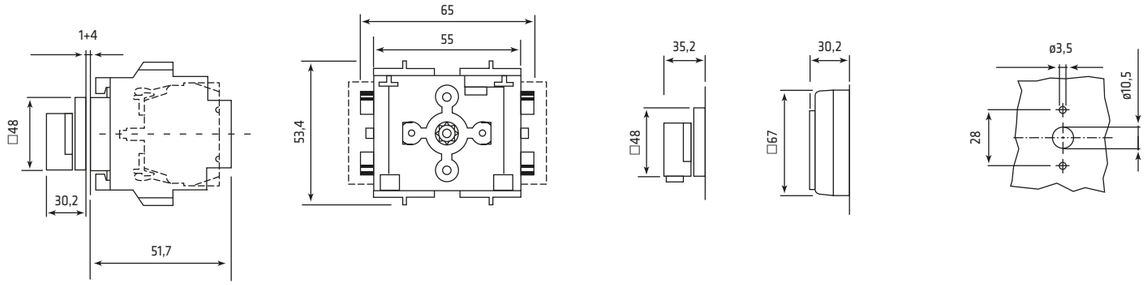

Actuator Type 001 002 | 003 004 | 009 010 | Panel

TYPE R

- Screw fixing.
- See page 70 for combinable actuators.

SERIES	AC-21A AMP. 690V	AC-23A AMP. 400V	CODE 2 POLES	CODE 3 POLES	CODE 4 POLES
SE63	63	50	SE630002R	SE630003R	SE630004R
SE80	80	60	SE800002R	SE800003R	SE800004R
SE100	100	67	SE1000002R	SE1000003R	SE1000004R

2 POLES

3 POLES

4 POLES

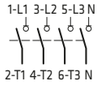

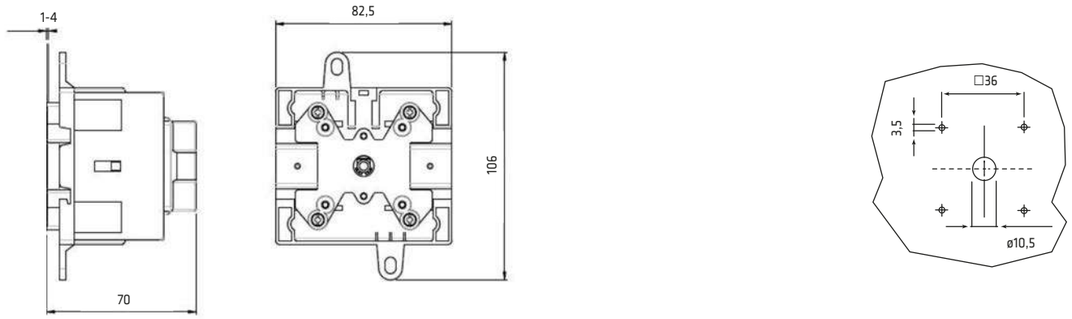

Panel

TYPE X

- Central fixing hole ø22,5 mm.
- See page 72 for combinable actuators.

SERIES	AC-21A AMP. 690V	AC-23A AMP. 400V	CODE 2 POLES	CODE 3 POLES	CODE 4 POLES
SE16	32	25	SE1610F2X	SE163003X	SE163004X
SE32	40	32	SE3210F2X	SE323003X	SE323004X

2 POLES

3 POLES

4 POLES

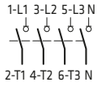

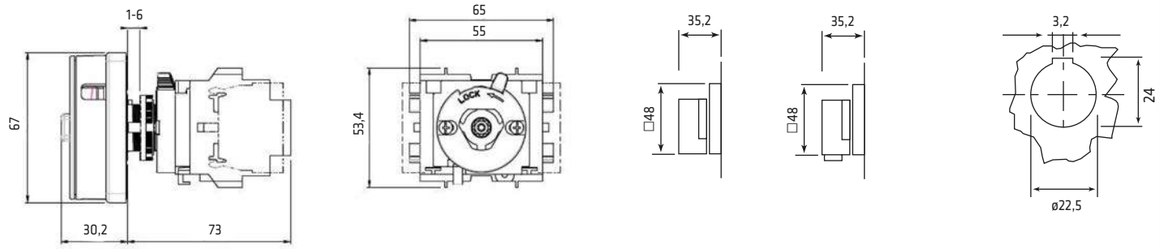

Actuator Type 089X 090X | 079X 080X | 087X 088X | Panel

New Support D.22
for Regolus
switch disconnectors

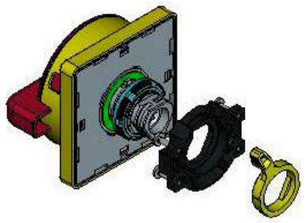

3 Blocking points

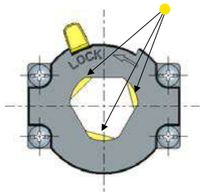

Lock Position

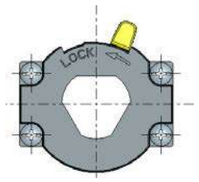

Unlock position

BASE MOUNTING

Dimensions and details of fixing holes

TYPE B

- Fixing box DIN RAIL DIN-EN 50022-35.
- Suitable for Door locking actuators.
- See page 69 and 73 for combinable actuators.

SERIES	AC-21A	AC-23A	CODE		
	AMP. 690V	AMP. 400V	2 POLES	3 POLES	4 POLES
SE16	32	25	SE1610F2B	SE163003B	SE163004B
SE32	40	32	SE3210F2B	SE323003B	SE323004B

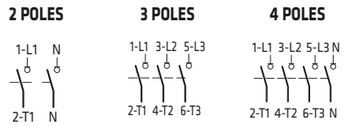

	STANDARD SHAFT	EXTENSION SHAFT □5 CODE 20401089
L min	80	80 (with cut shaft)
L max	120	220

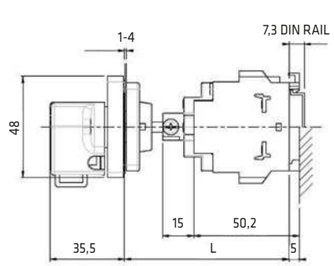

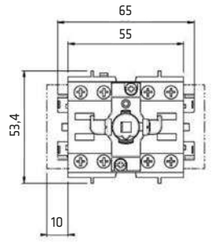

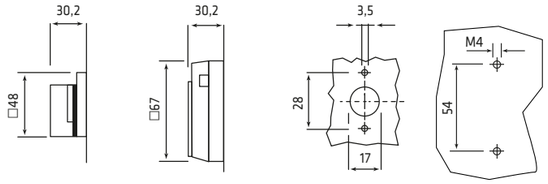

Actuator Type 005 006 | 020 030 | 011 012 | Panel | Box

TYPE B

- Fixing box DIN RAIL DIN-EN 50022-35.
- Suitable for Door locking actuators.
- See page 71 for combinable actuators.

SERIES	AC-21A	AC-23A	CODE		
	AMP. 690V	AMP. 400V	2 POLES	3 POLES	4 POLES
SE63	63	50	SE630002B	SE630003B	SE630004B
SE80	80	60	SE800002B	SE800003B	SE800004B
SE100	100	67	SE1000002B	SE1000003B	SE1000004B

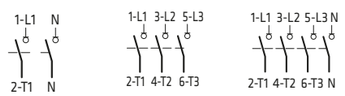

	STANDARD SHAFT	EXTENSION SHAFT □6 CODE 20900010
L min	98	98 (with cut shaft)
L max	128	228

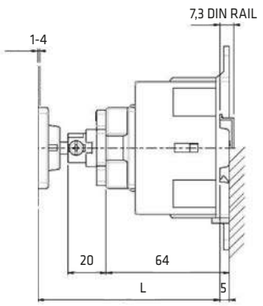

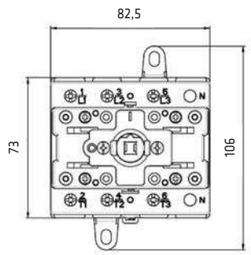

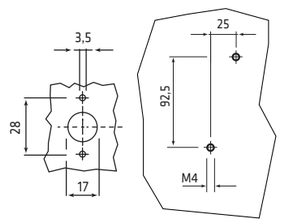

Panel | Box

SWITCH DISCONNECTORS WITH FUSE-HOLDERS | BASE MOUNTING

TYPE B Box

- Fixing box DIN RAIL DIN-EN 50022-35.
- Suitable for Door locking actuators.
- Sectionable fuses-holders.
- For cilindrical fuses 10,3x38 mm UL.

SERIE	AC-21A	UL USO GEN.	CODE		
	AMP. 690V	AMP. 600V	2 POLES	3 POLES	4 POLES
FS20	25	20	FS2010F2B	FS203003B	FS203004B
FS30	32	30	FS3010F2B	FS303003B	FS303004B

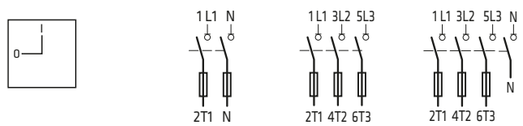

Dimensions and details of fixing holes

	STANDARD SHAFT	EXTENSION SHAFT □5 CODE 20401089
L min	80	80 (with cut shaft)
L max	120	220

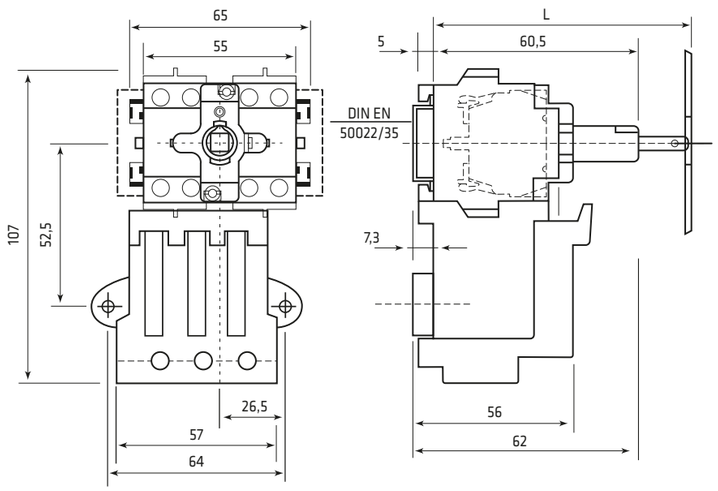

FUSE-HOLDERS

For TYPE B Box

- For disconnectors SE16-SE32 Series, 2-3-4 poles, Base mounting Type B Box.
- For cilindrical fuses 10,3x38 mm UL max 32A.
- IP20 Terminal protection.

CODE
3 POLES
TF323

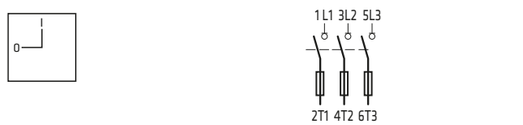

Dimensions and details of fixing holes

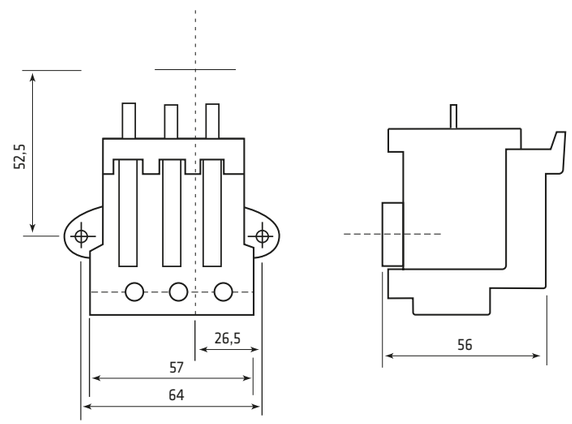

BOX FIXING PLATE

SE16 - SE32
11814005

BOX SHAFT BF1/1NGO

SE16 - SE32
11706237

SHAFT EXTENSION FOR DOOR INTERLOCK

	□5	□6
	SE16 - SE32	SE63 - SE80 SE100
L 185 mm	20401089	20900010
L 300 mm	20401164	20900011

TERMINAL PROTECTION

2 pieces

SE63 - SE80 - SE100 / 4 poles Box & Psnel Mounting
20900003

AUXILIARY CONTACTS

SE16 - SE32	
CODE	DIAGRAM
PL004001	1NC 1 — 2
PL004002	1NO 3 — 4

AUXILIARY CONTACTS FIXING PLATE

SE16 - SE32
11814021

The sale of these two accessories is matched for the correct use of the product.

THERMOPLASTIC ENCLOSURES

BF1/1NGO

THERMOPLASTIC BOX

IP65 □

- For bodies Base Mounting type B.
- Arranged for nr. 8 Pg16 - M20 cable glands.
- **Dimensions:** 120x100x85 mm.
- Black box - Grey cover.

SERIES	CODE
SE16	BF1/1NGO
SE32	

Order also:

Shaft > 11706237

Plate support > 11814005

BF1/2NGO

THERMOPLASTIC BOX

IP65 □

- For bodies Panel Mounting type R.
- Arranged for nr. 8 Pg16 - M20 cable glands.
- **Dimensions:** 120x100x85 mm.
- Black box - Grey cover.

SERIES	CODE
SE16	BF1/2NGO
SE32	

BN1/ONGO

THERMOPLASTIC BOX
COVER WITHOUT HOLES

IP65 □

- For bodies Panel Mounting type R.
- Arranged for nr. 8 Pg16 - M20 cable glands.
- **Dimensions:** 120x100x85 mm.
- Black box - Grey cover.

SERIES	CODE
SE16	BN1/ONGO
SE32	

METAL ENCLOSURES

BNA/ONGA

METAL BOX
COVER WITHOUT HOLES

IP65 □

- For bodies Panel Mounting type R and Base Mounting type B.
- Complete with nr. 2 M20 and nr. 2 M25 cable glands plugs.
- **Dimensions:** 105x140x85 mm.
- Black box - Grey cover.

SERIES	CODE
SE16	BNA/ONGA
SE32	

GIOVENZANA
INTERNATIONAL B.V.

ACTUATORS | PANEL MOUNTING TYPE R | SCREW FIXING

ACTUATORS | DOOR LOCKING TYPE B | SCREW FIXING

SE16 - SE32 SERIES | EN 60529 - IP65 - UL50 Type 1 - 4 - 4x -12 (◆) Protection NEMA 4x.

- Grey Plate
- Black knob

SERIES	FRONT PLATE SIZE	CODE PANEL MOUNTING TYPE R	LEGEND PLATE	SERIES	FRONT PLATE SIZE	CODE DOOR LOCKING TYPE B ▶	LEGEND PLATE
SE16 - SE32	□48	001/0001		SE16 - SE32	□48	020/0001	

- Grey Plate
- Black knob
- Locking Facility (Max 1 lock)

SERIES	FRONT PLATE SIZE	CODE PANEL MOUNTING TYPE R	LEGEND PLATE	SERIES	FRONT PLATE SIZE	CODE DOOR LOCKING TYPE B ▶	LEGEND PLATE
SE16 - SE32	□48	003/0001 ◆		SE16 - SE32	□48	005/0001 ◆	

- Grey Plate
- Black knob
- Locking Facility (Max 3 locks)

SERIES	FRONT PLATE SIZE	CODE PANEL MOUNTING TYPE R	LEGEND PLATE	SERIES	FRONT PLATE SIZE	CODE DOOR LOCKING TYPE B ▶	LEGEND PLATE
SE16 - SE32	□67	009/0001 ◆		SE16 - SE32	□67	011/0001 ◆	

- Yellow Plate
- Red knob

SERIES	FRONT PLATE SIZE	CODE PANEL MOUNTING TYPE R	LEGEND PLATE	SERIES	FRONT PLATE SIZE	CODE DOOR LOCKING TYPE B ▶	LEGEND PLATE
SE16 - SE32	□48	002/0001		SE16 - SE32	□48	030/0001	

- Yellow Plate
- Red knob
- Locking Facility (Max 1 lock)

SERIES	FRONT PLATE SIZE	CODE PANEL MOUNTING TYPE R	LEGEND PLATE	SERIES	FRONT PLATE SIZE	CODE DOOR LOCKING TYPE B ▶	LEGEND PLATE
SE16 - SE32	□48	004/0001 ◆		SE16 - SE32	□48	006/0001 ◆	

- Yellow Plate
- Red knob
- Locking Facility (Max 3 locks)

SERIES	FRONT PLATE SIZE	CODE PANEL MOUNTING TYPE R	LEGEND PLATE	SERIES	FRONT PLATE SIZE	CODE DOOR LOCKING TYPE B ▶	LEGEND PLATE
SE16 - SE32	□67	010/0001 ◆		SE16 - SE32	□67	012/0001 ◆	

▶ The actuator for DOOR LOCKING TYPE B includes the shaft □ 5 L85.

ACTUATORS | PANEL MOUNTING TYPE R | SCREW FIXING

ACTUATORS | DOOR LOCKING TYPE B | SCREW FIXING

SE63 - SE80 - SE100 SERIES | EN 60529 - IP65 - UL50 Type 1 - 4 - 4x -12 (◆) Protection NEMA 4x.

- Grey Plate
- Black knob
- Locking Facility (Max 3 locks)

SERIES	FRONT PLATE SIZE	CODE PANEL MOUNTING TYPE R	LEGEND PLATE
SE63 - SE80 SE100	□67	049/0001-L ◆	0 1

SERIES	FRONT PLATE SIZE	CODE DOOR LOCKING TYPE B ▸	LEGEND PLATE
SE63 - SE80 SE100	□67	321/0001	0 1

- Yellow Plate
- Red knob
- Locking Facility (Max 3 locks)

SERIES	FRONT PLATE SIZE	CODE PANEL MOUNTING TYPE R	LEGEND PLATE
SE63 - SE80 SE100	□67	050/0001-L ◆	0 1

SERIES	FRONT PLATE SIZE	CODE DOOR LOCKING TYPE B ▸	LEGEND PLATE
SE63 - SE80 SE100	□67	322/0001	0 1

▶ The actuator for DOOR LOCKING TYPE B includes the shaft □ 6 L85.

ACTUATORS Ø22 | PANEL MOUNTING TYPE X | CENTRAL FIXING

ACTUATORS Ø22 | PANEL MOUNTING TYPE B | CENTRAL FIXING

SE16 - SE32 SERIES | EN 60529 - IP65 - UL50 Type 1 - 4 - 4x -12 (◆) Protection NEMA 4x.

- Grey Plate
- Black knob

SERIES	FRONT PLATE SIZE	CODE PANEL MOUNTING TYPE X	LEGEND PLATE
SE16 - SE32	☐48	079X/0001	

SERIES	FRONT PLATE SIZE	CODE DOOR LOCKING TYPE B ▶	LEGEND PLATE
SE16 - SE32	☐48	095/0001	

- Grey Plate
- Black knob
- Locking Facility (Max 1 lock)

SERIES	FRONT PLATE SIZE	CODE PANEL MOUNTING TYPE X	LEGEND PLATE
SE16 - SE32	☐48	087X/0001 ◆	

SERIES	FRONT PLATE SIZE	CODE DOOR LOCKING TYPE B ▶	LEGEND PLATE
SE16 - SE32	☐48	077/0001 ◆	

- Grey Plate
- Black knob
- Locking Facility (Max 3 locks)

SERIES	FRONT PLATE SIZE	CODE PANEL MOUNTING TYPE X	LEGEND PLATE
SE16 - SE32	☐67	089X/0001 ◆	

SERIES	FRONT PLATE SIZE	CODE DOOR LOCKING TYPE B ▶	LEGEND PLATE
SE16 - SE32	☐67	063/0001 ◆	

- Yellow Plate
- Red knob

SERIES	FRONT PLATE SIZE	CODE PANEL MOUNTING TYPE X	LEGEND PLATE
SE16 - SE32	☐48	080X/0001	

SERIES	FRONT PLATE SIZE	CODE DOOR LOCKING TYPE B ▶	LEGEND PLATE
SE16 - SE32	☐48	070/0001	

- Yellow Plate
- Red knob
- Locking Facility (Max 1 lock)

SERIES	FRONT PLATE SIZE	CODE PANEL MOUNTING TYPE X	LEGEND PLATE
SE16 - SE32	☐48	088X/0001 ◆	

SERIES	FRONT PLATE SIZE	CODE DOOR LOCKING TYPE B ▶	LEGEND PLATE
SE16 - SE32	☐48	069/0001 ◆	

- Yellow Plate
- Red knob
- Locking Facility (Max 3 locks)

SERIES	FRONT PLATE SIZE	CODE PANEL MOUNTING TYPE X	LEGEND PLATE
SE16 - SE32	☐67	090X/0001 ◆	

SERIES	FRONT PLATE SIZE	CODE DOOR LOCKING TYPE B ▶	LEGEND PLATE
SE16 - SE32	☐67	064/0001 ◆	

▶ The actuator for DOOR LOCKING TYPE B includes the shaft ☐ 5 L85.

C01

IP65

- Opening in "0" position.
- Arranged for nr. 8 Pg16 cable glands of which nr. 2 on the bottom.
- **Dimensions:** 120x100x85 mm.
- Black box - Grey cover - Black knob.

SERIES	AC-21A	AC-23A	CODE	
	AMP. 690V	AMP. 400V	3 POLES	4 POLES
SE16	32	25	SE160003BC01	SE160004BC01
SE32	40	32	SE320003BC01	SE320004BC01

3 POLES

4 POLES

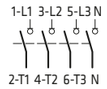

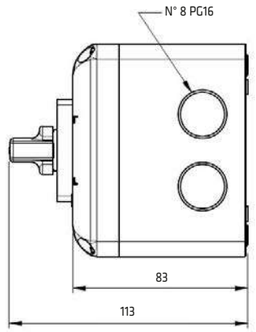

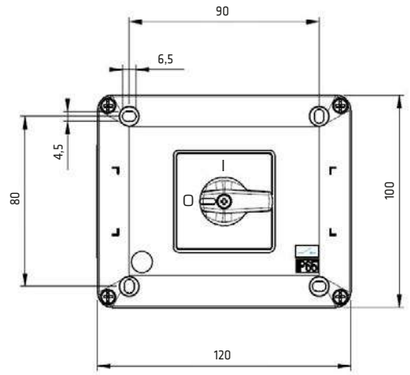

E01

IP65

- Opening in "0" position.
- Arranged for nr. 4 cable glands M25/M32 + nr. 2 closed holes ø22,5 mm on the bottom.
- **Dimensions:** 130x180x106 mm.
- Black box - Grey cover - Black knob.

SERIES	AC-21A	AC-23A	CODE	
	AMP. 690V	AMP. 400V	3 POLES	4 POLES
SE63	63	50	SE630003BE01	SE630004BE01
SE80	80	60	SE800003BE01	SE800004BE01

3 POLES

4 POLES

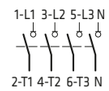

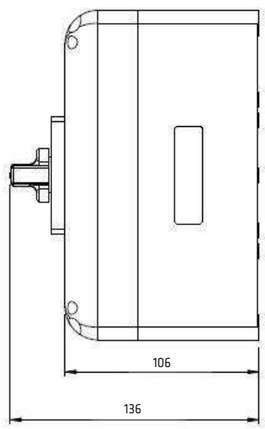

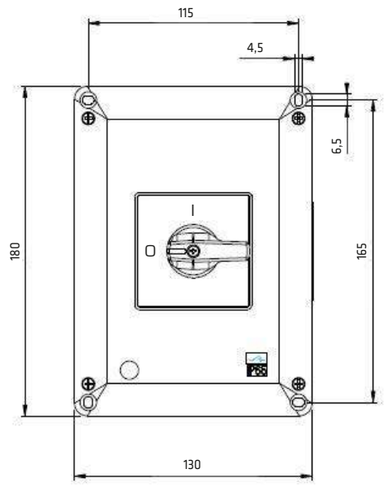

C09

IP65

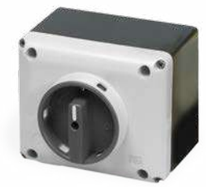

- Opening in "0" position.
- Arranged for nr. 8 Pg16 cable glands of which nr. 2 on the bottom.
- With locking facility in "0 - OFF" (Max 3 locks)
- **Dimensions:** 120x100x85 mm.
- Black box - Grey cover - Black knob.

SERIES	AC-21A	AC-23A	CODE	
	AMP. 690V	AMP. 400V	3 POLES	4 POLES
SE16	32	25	SE160003BC09	SE160004BC09
SE32	40	32	SE320003BC09	SE320004BC09

3 POLES

4 POLES

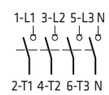

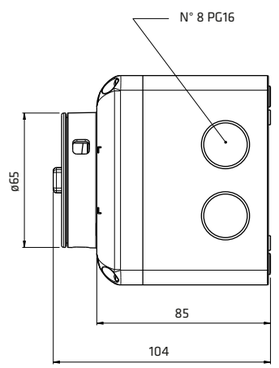

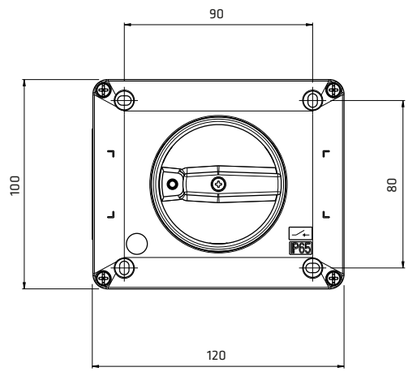

C10

IP65 ⧈

- Opening in "0" position.
- Arranged for nr. 8 Pg16 cable glands of which nr. 2 on the bottom.
- With locking facility in "0 - OFF" (Max 3 locks).
- **Dimensions:** 120x100x85 mm.
- Black box - Yellow cover - Red knob.

SERIES	AC-21A	AC-23A	CODE	
	AMP. 690V	AMP. 400V	3 POLES	4 POLES
SE16	32	25	SE160003BC10	SE160004BC10
SE32	40	32	SE320003BC10	SE320004BC10

3 POLES

4 POLES

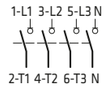

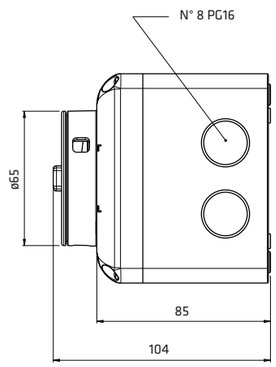

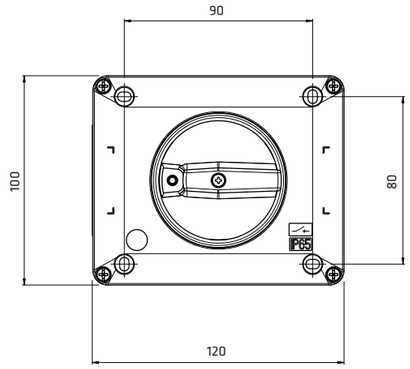

E09

IP65 ⧈

- Opening in "0" position.
- Arranged with nr. 4 cable glands M25/M32 + nr. 2 closed holes ø22,5 mm on the bottom.
- With locking facility in "0 - OFF" (Max 3 locks).
- **Dimensions:** 130x180x106 mm.
- Black box - Grey cover - Black knob.

SERIES	AC-21A	AC-23A	CODE	
	AMP. 690V	AMP. 400V	3 POLES	4 POLES
SE63	63	50	SE630003BE09	SE630004BE09
SE80	80	60	SE800003BE09	SE800004BE09

3 POLES

4 POLES

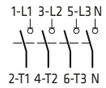

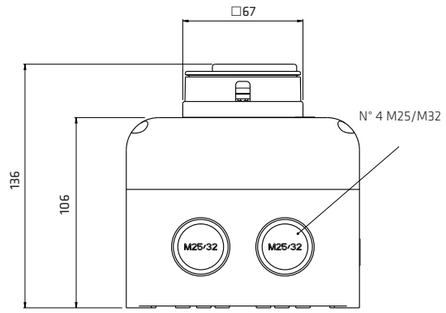

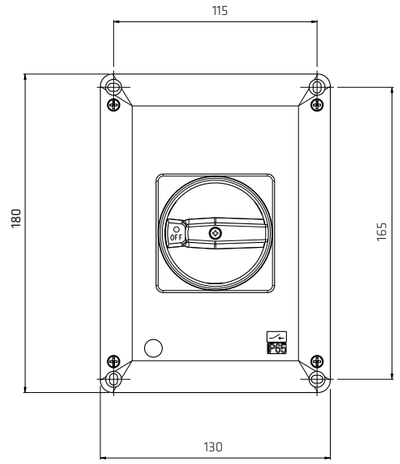

E10

IP65 ⧈

- Opening in "0" position.
- Arranged with nr. 4 cable glands M25/M32 + nr. 2 closed holes ø22,5 mm on the bottom.
- With locking facility in "0 - OFF" (Max 3 locks).
- **Dimensions:** 130x180x106 mm.
- Black box - Yellow cover - Red knob.

SERIES	AC-21A	AC-23A	CODE	
	AMP. 690V	AMP. 400V	3 POLES	4 POLES
SE63	63	50	SE630003BE10	SE630004BE10
SE80	80	60	SE800003BE10	SE800004BE10

3 POLES

4 POLES

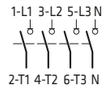

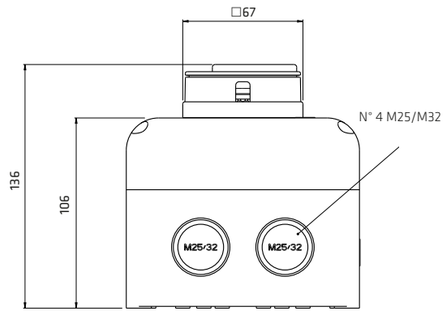

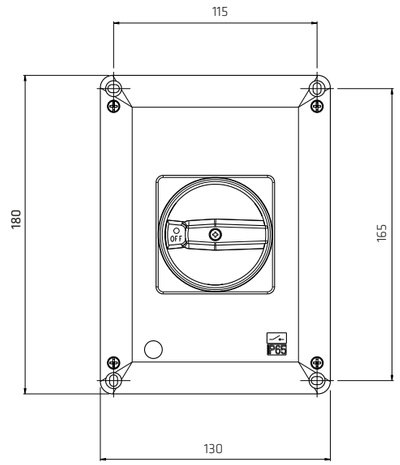

C41

IP65 ⊡

- Opening in "0" position.
- Complete with nr. 2 M32 and nr. 2 M40 cable glands plugs.
- With locking facility in "0 - OFF" (Max 3 locks).
- **Dimensions:** 140x230x114 mm
- Black box - Yellow cover - Red knob.
- UL Approval.

SERIES	AC-21A	AC-23A	CODE	
	AMP. 690V	AMP. 400V	3 POLES	4 POLES
SE63	63	50	SE630003BC41	SE630004BC41
SE80	80	60	SE800003BC41	SE800004BC41
SE100	100	67	SE1000003BC41	SE1000004BC41

3 POLES

4 POLES

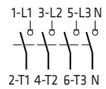

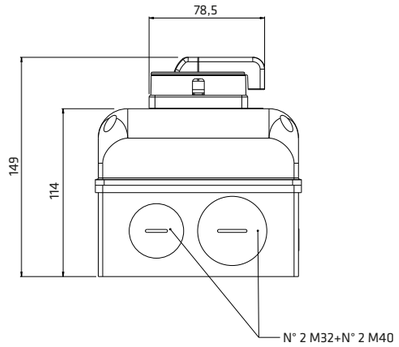

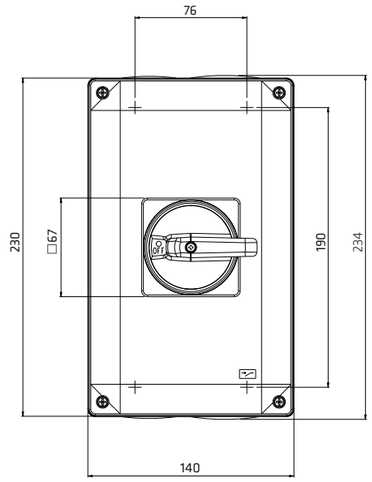

C42

IP65 ⊡

- Opening in "0" position.
- Complete with nr. 2 M32 and nr. 2 M40 cable glands plugs.
- With locking facility in "0 - OFF" (Max 3 locks).
- **Dimensions:** 140x230x114 mm.
- Black box - Grey cover - Black knob.
- UL Approval.

SERIES	AC-21A	AC-23A	CODE	
	AMP. 690V	AMP. 400V	3 POLES	4 POLES
SE63	63	50	SE630003BC42	SE630004BC42
SE80	80	60	SE800003BC42	SE800004BC42
SE100	100	67	SE1000003BC42	SE1000004BC42

3 POLES

4 POLES

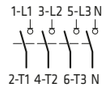

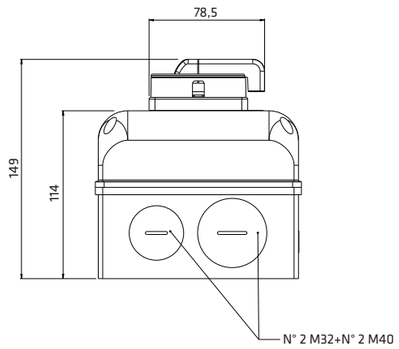

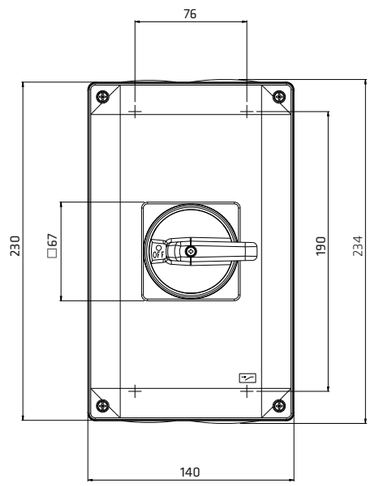

A09

IP65

- Opening in "0" position.
- Complete with nr. 2 M20 + nr. 2 M25 cable glands plugs.
- With locking facility in "0 - OFF" (Max 3 locks).
- **Dimensions:** 105x140x85 mm.
- Black box - Grey cover - Black knob.

SERIES	AC-21A	AC-23A	CODE	
	AMP. 690V	AMP. 400V	3 POLES	4 POLES
SE16	32	25	SE160003BA09	SE160004BA09
SE32	40	32	SE320003BA09	SE320004BA09

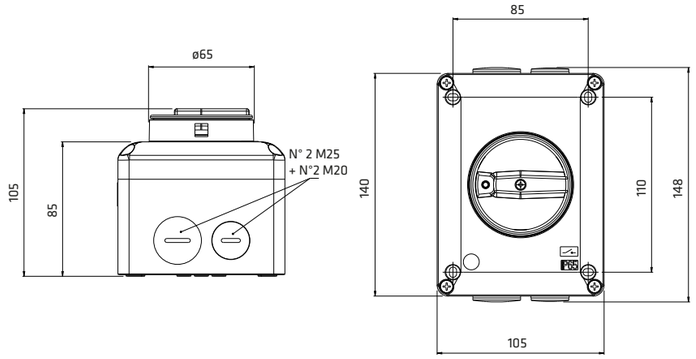

A10

IP65

- Opening in "0" position.
- Complete with nr. 2 M20 + nr. 2 M25 cable glands plugs.
- With locking facility in "0 - OFF" (Max 3 locks).
- **Dimensions:** 105x140x85 mm.
- Black box - Yellow cover - Red knob.

SERIES	AC-21A	AC-23A	CODE	
	AMP. 690V	AMP. 400V	3 POLES	4 POLES
SE16	32	25	SE160003BA10	SE160004BA10
SE32	40	32	SE320003BA10	SE320004BA10

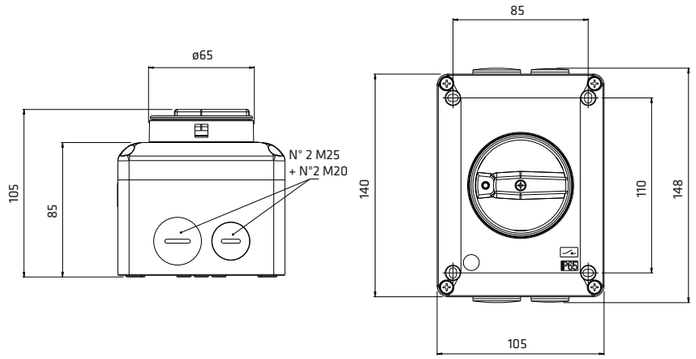

AB9

IP65

- Opening in "0" position.
- Complete with nr. 2 M40 cable glands plugs.
- With locking facility in "0 - OFF" (Max 3 locks).
- **Dimensions:** 150x200x110 mm.
- Black box - Grey cover - Black knob.

SERIES	AC-21A	AC-23A	CODE	
	AMP. 690V	AMP. 400V	3 POLES	4 POLES
SE63	63	50	SE630003BAB9	SE630004BAB9
SE80	80	60	SE800003BAB9	SE800004BAB9
SE100	100	67	SE1000003BAB9	SE1000004BAB9

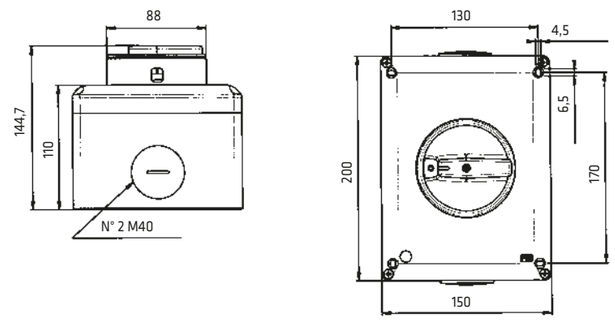

AB0

IP65

- Opening in "0" position.
- Complete with nr. 2 M40 cable glands plugs.
- With locking facility in "0 - OFF" (Max 3 locks).
- **Dimensions:** 150x200x110 mm.
- Black box - Yellow cover - Red knob.

SERIES	AC-21A	AC-23A	CODE	
	AMP. 690V	AMP. 400V	3 POLES	4 POLES
SE63	63	50	SE630003BAB0	SE630004BAB0
SE80	80	60	SE800003BAB0	SE800004BAB0
SE100	100	67	SE1000003BAB0	SE1000004BAB0

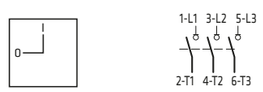

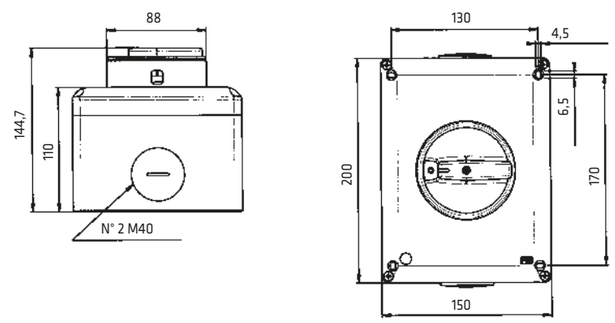

PANEL MOUNTING

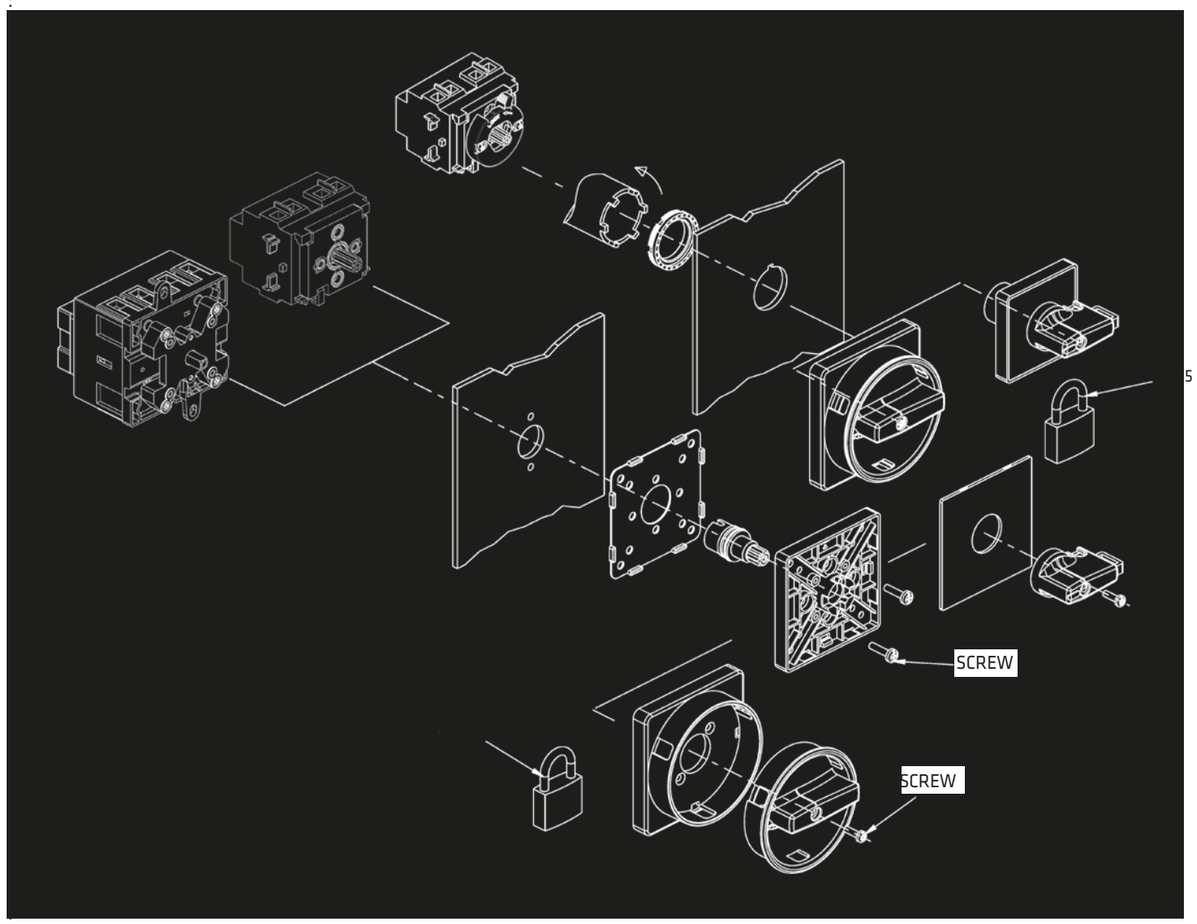

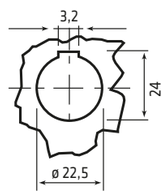

Panel

ø22,5 Hole central fixing

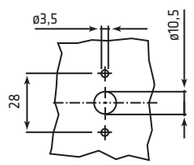

Panel

Screw fixing
SE16-SE32 Series

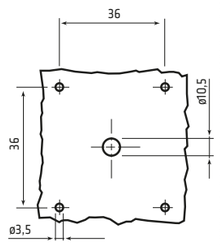

Panel

Screw fixing
SE63-SE80-SE100 Series

BASE MOUNTING

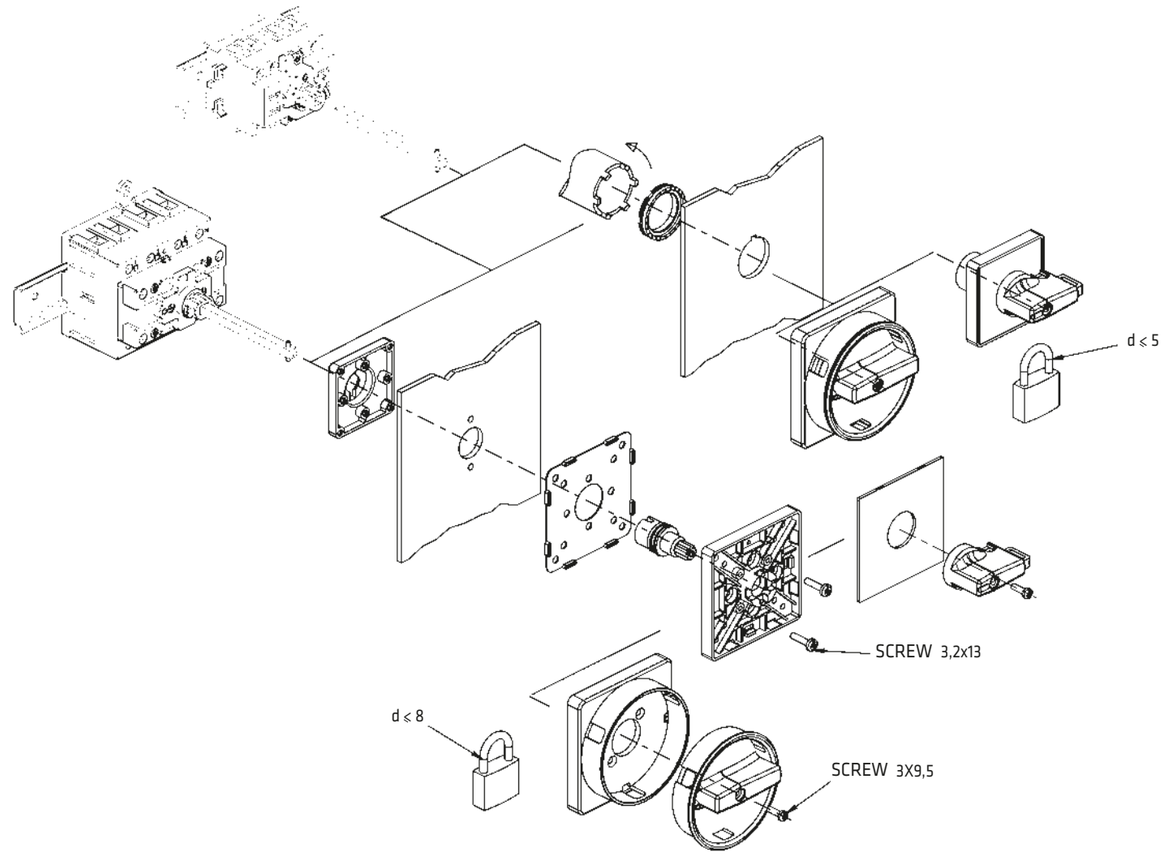

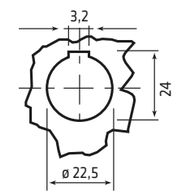

Panel

ø22,5 Hole central fixing

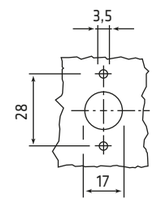

Panel

Screw fixing
SE16...SE100 Series

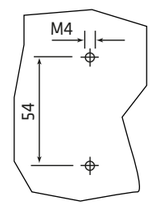

Box

Screw fixing
SE16-SE32 Series
with plate 11814005

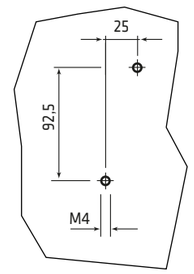

Box

Screw fixing
SE63-SE80-SE100 Series

NOTES

NOTES

NOTES

NOTES

LOGISTICS

Giovenzana International B.V. to support the market and his different necessity has created this organization that is always in process to cover territory in five different hubs.

SALES OFFICE

GIOVENZANA INTERNATIONAL B.V.
Budapest, Hungary - Office and Delivery

G.T.R. LLC
Moscow, Russian Federation - Office and Logistic Hub

GIOVENZANA CONTROLS INDIA Pvt. Ltd.
Mumbai, India - Office

GIOVENZANA DEUTSCHLAND
Hannover, Germany - Office

GIOVENZANA do Brasil
São Paulo, Brasil - Office and Logistic Hub

Branch

GIOVENZANA INTERNATIONAL B.V.
Dubai U.A.E. - Office and Logistic Hub for ME and FE included China, India, Oceania, Africa

Headquarter

GIOVENZANA INTERNATIONAL B.V.
Amsterdam, The Netherland - Industrial and Commercial

Manufacturers units

G.G.T. Srl
Milan, Italy - Historical Unit

G.G.Space Kft
Budapest, Hungary

Engineering

Electra Engineering Srl
Milan, Italy

Logistic warehouses

ITALY
HUNGARY
RUSSIAN FEDERATION
DUBAI U.A.E.
BRASIL